CABINET ASSEMBLY INSTRUCTIONS

WEITAI WOODEN WARE SDN BHD

TABLE OF CONTENTS

Assembling Instructions - Base Cabinet 3-6

Assembling Instructions - Lazy Susan Corner Base.Cabi.net..... 7-12

Assembling Instructions - Blind Corner Base Cabinet 13-18

Assembling Instructions - Base 3 Drawers Cabinet 19-24

Assembling Instructions - Wall Cabinet 25-27

Assembling Instructions - Wall Diagonal Corner Cabinet 28-32

Assembling Instructions - Pantry 33-38

Assembling Instructions - Oven Cabinet 39-45

Assembling Instructions - Vanity 46-51

ASSEMBLING INSTRUCTIONS - BASE CABINET

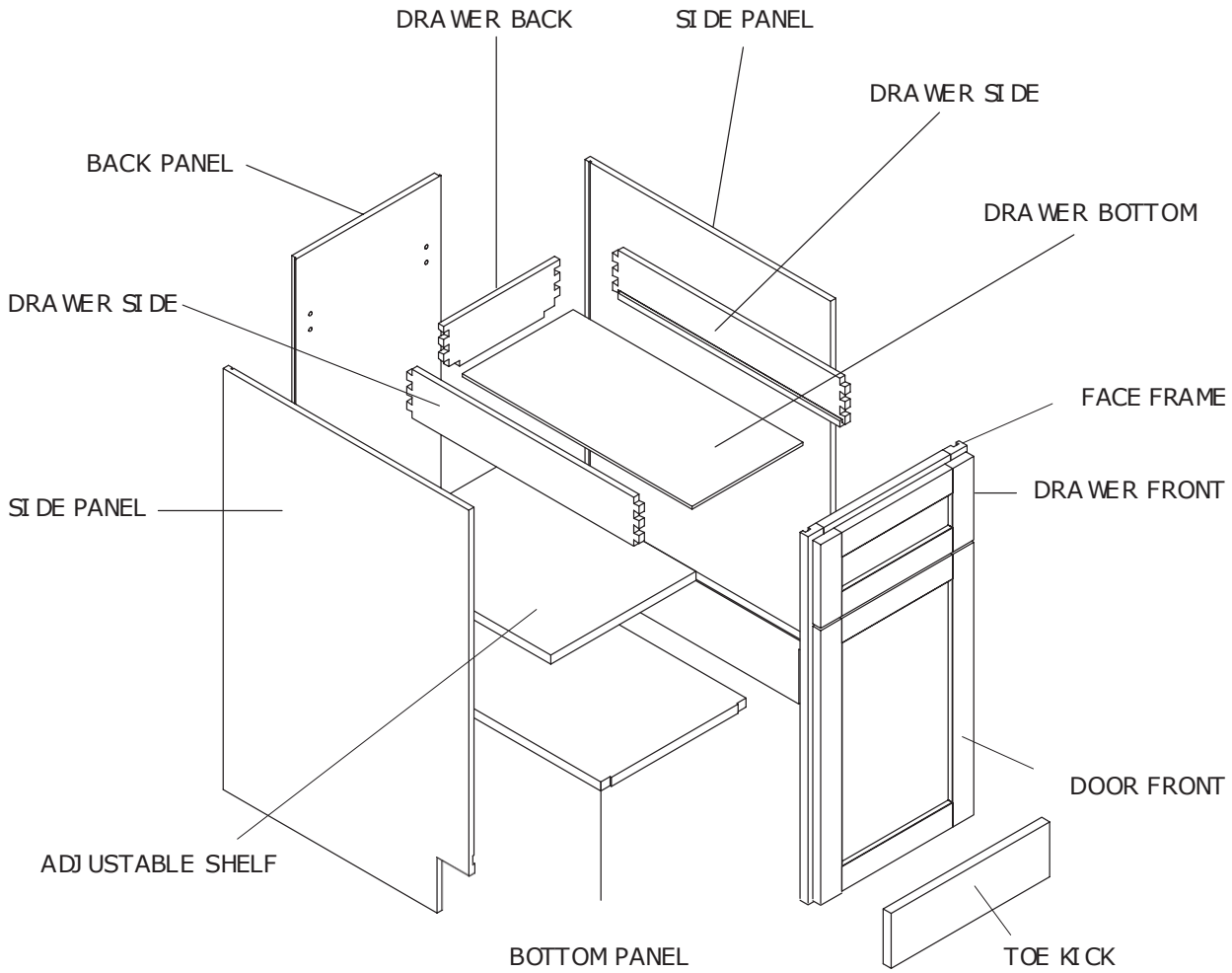

GLIDES	METAL BRACKETS	SCREWS	SHELF CLIPS	GLIDE SUPPORTS
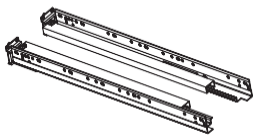	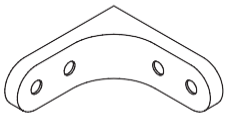	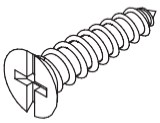	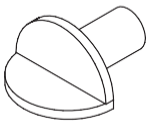	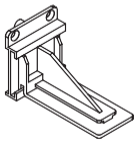

TOOLS

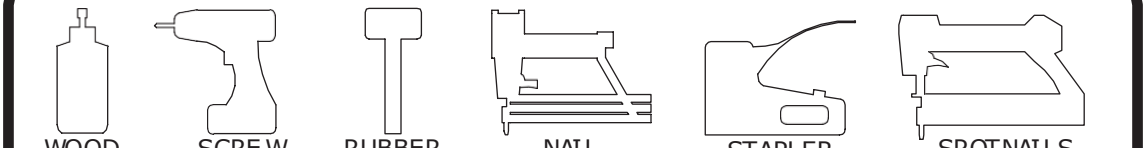

WOOD GLUE | SCREW DRIVER | RUBBER MALLET | NAIL GUN | STAPLER | SPOTNAILS XC1008

BASE CABINET

STEP 1

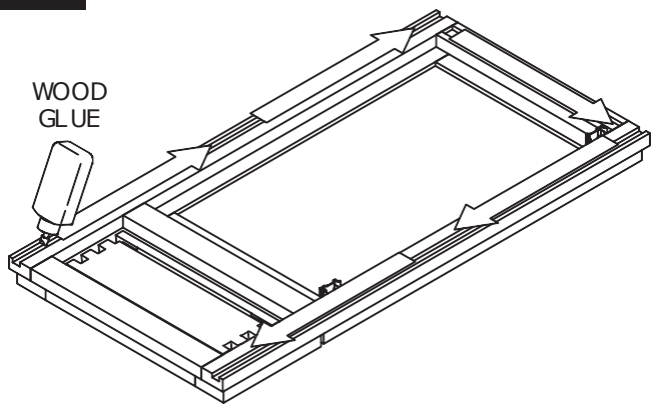

STEP 2

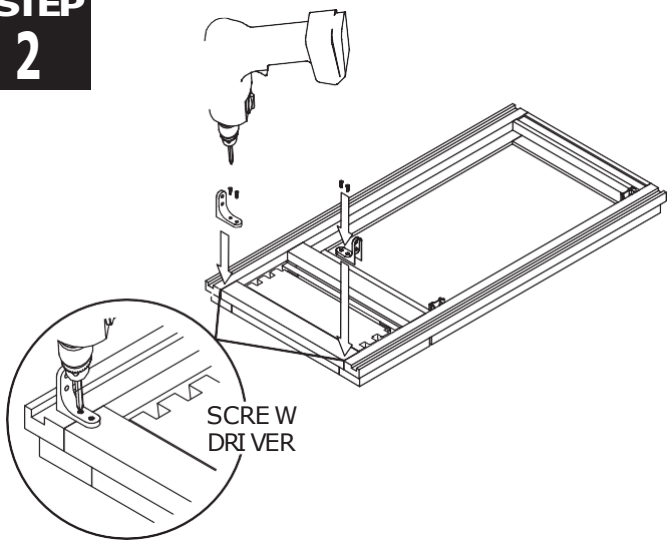

STEP 3

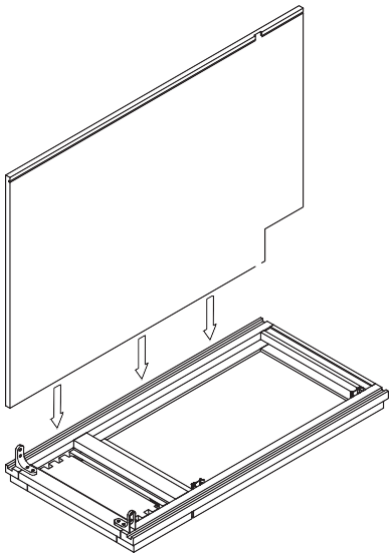

STEP 4

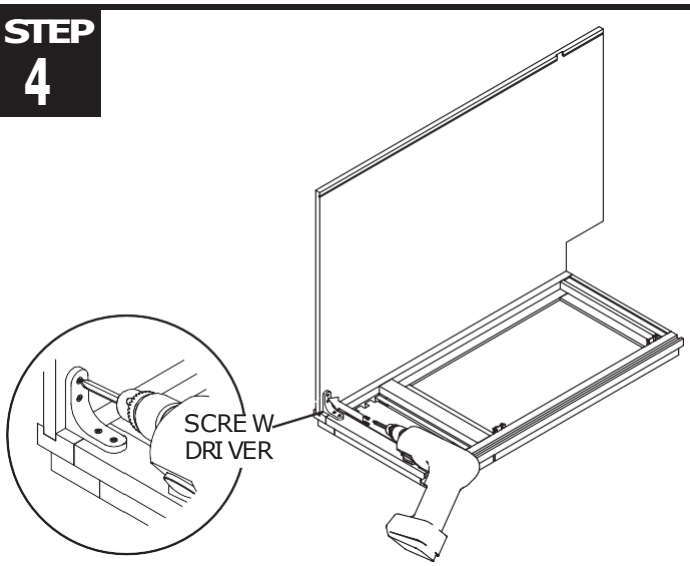

STEP 5

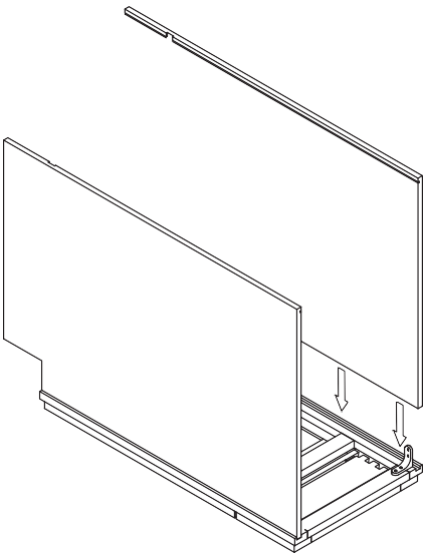

STEP 6

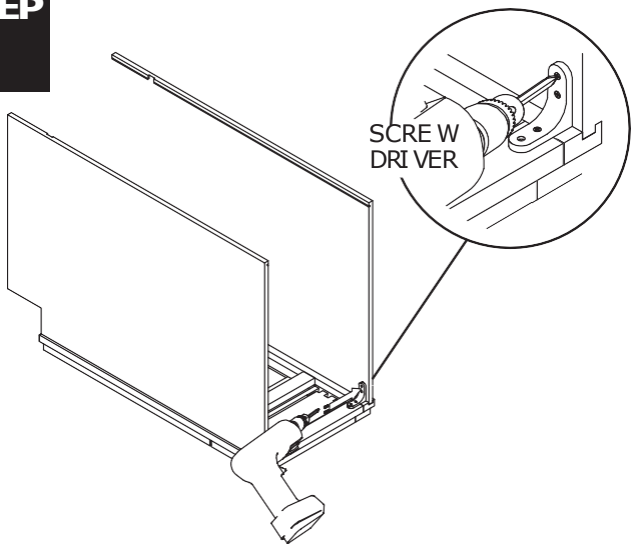

STEP 7

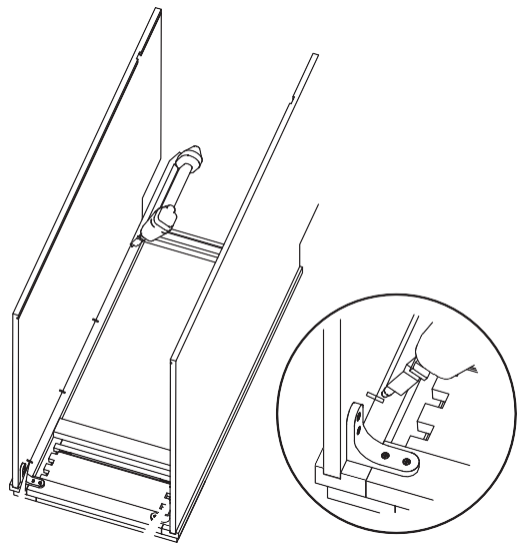

STEP 8

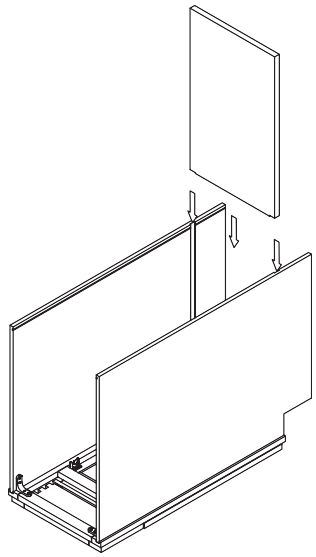

STEP 9

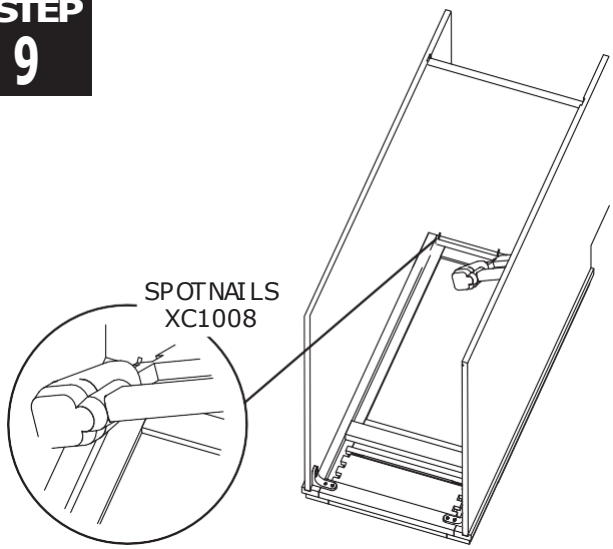

STEP 10

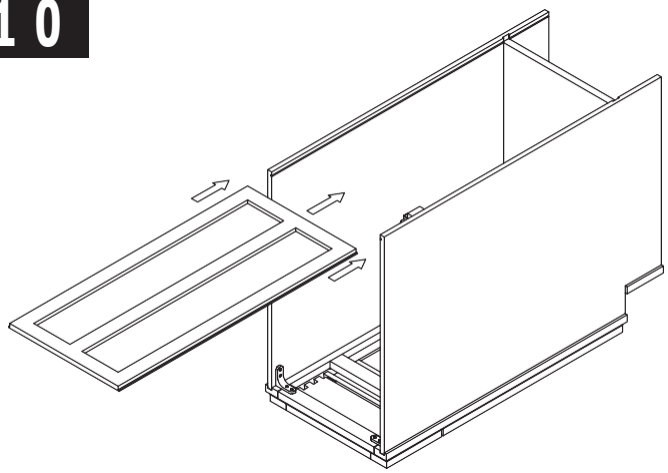

STEP 11

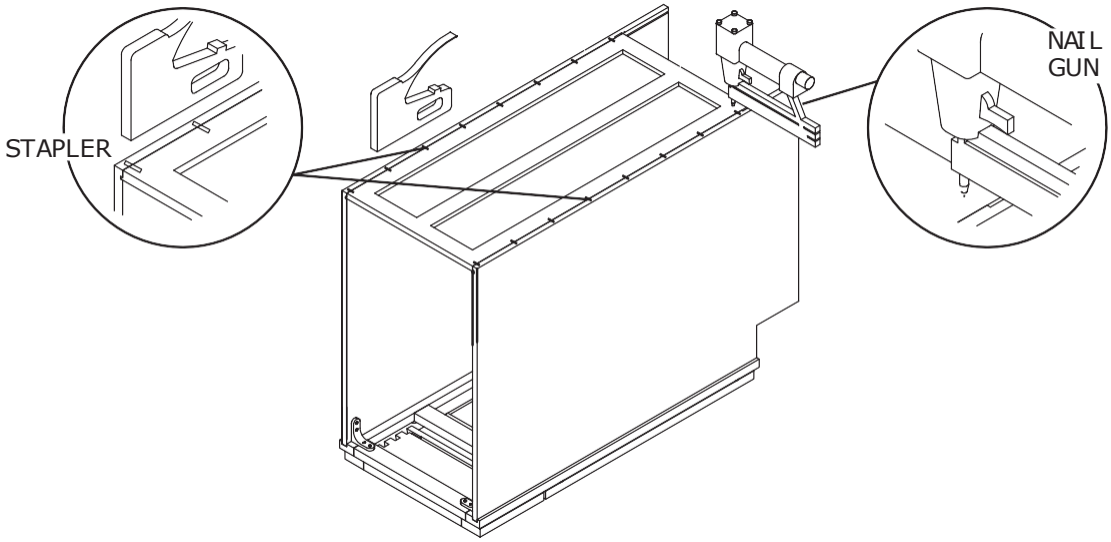

STEP 12

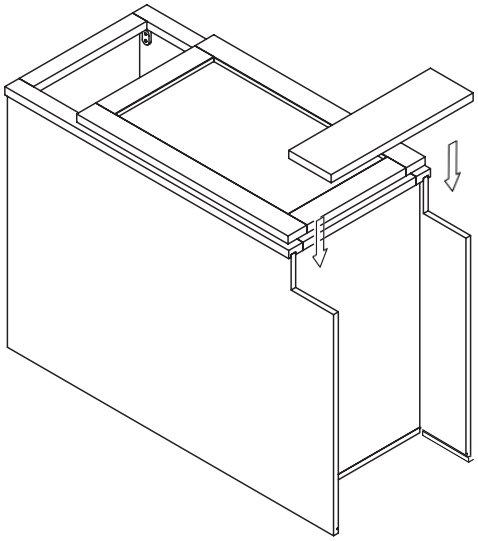

STEP 13

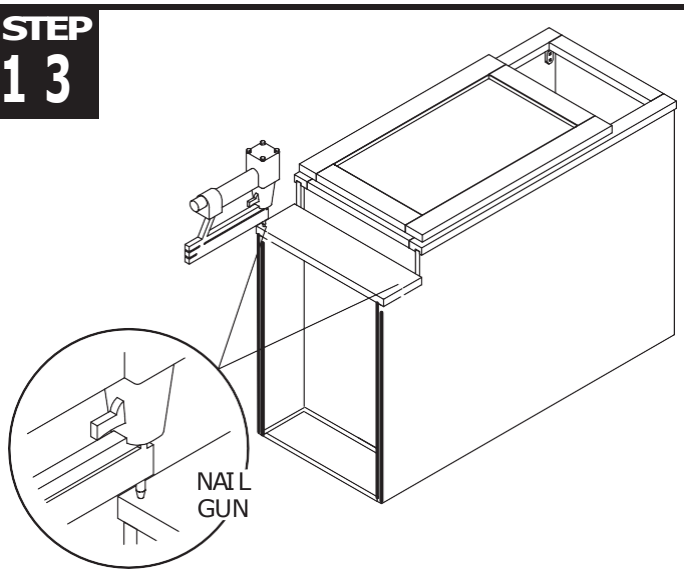

STEP 14

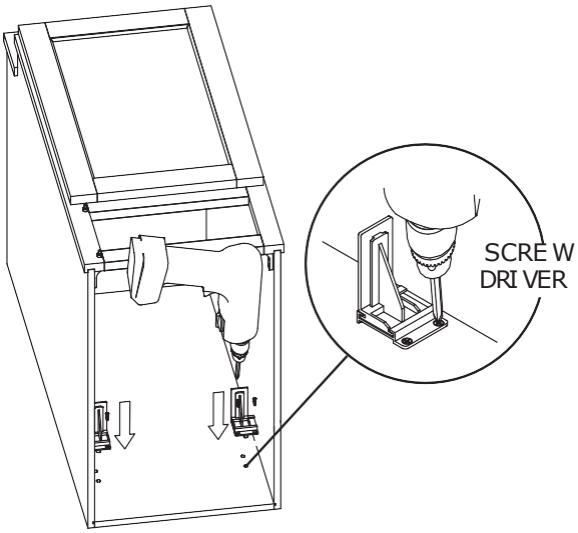

STEP 15

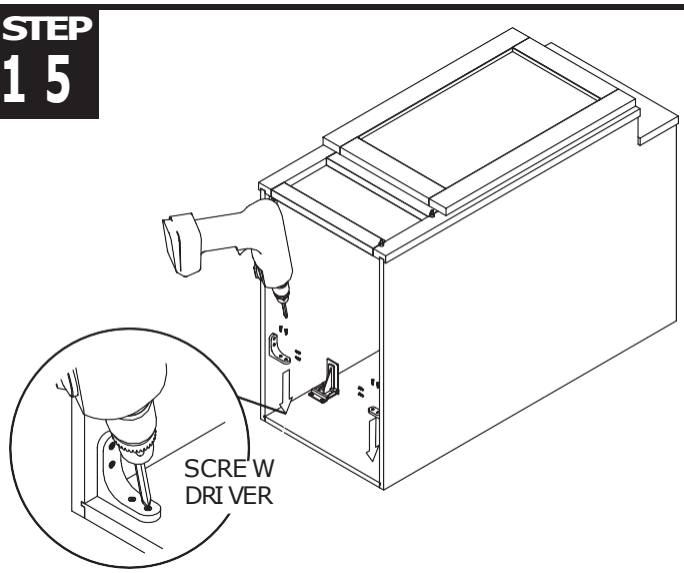

STEP 16

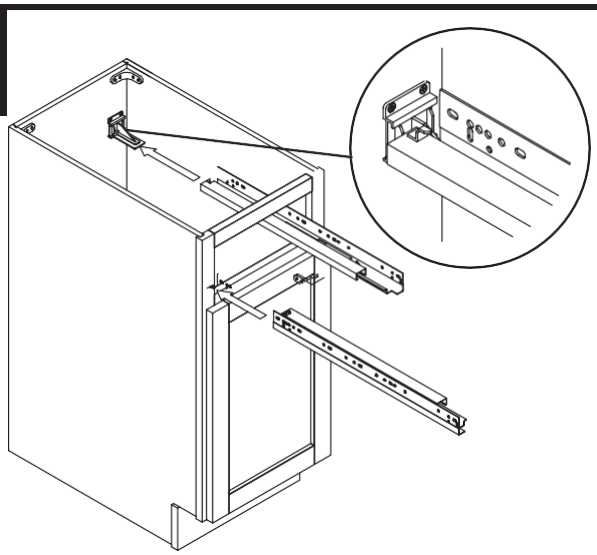

STEP 17

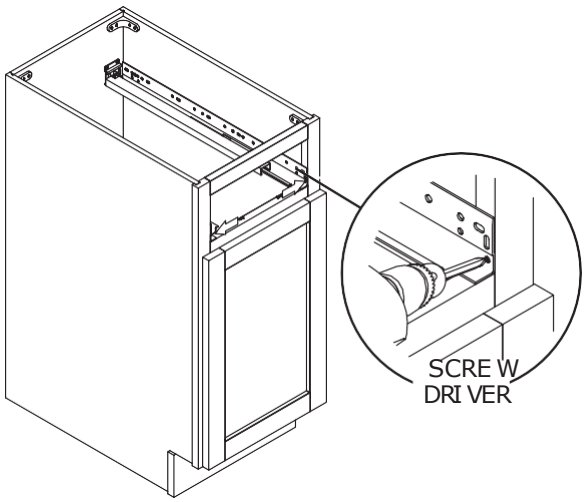

STEP 18

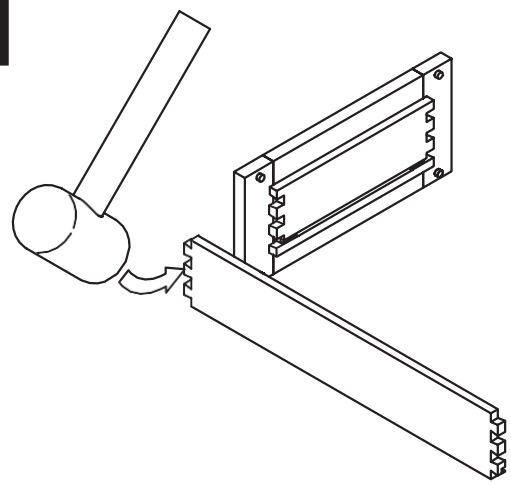

STEP 19

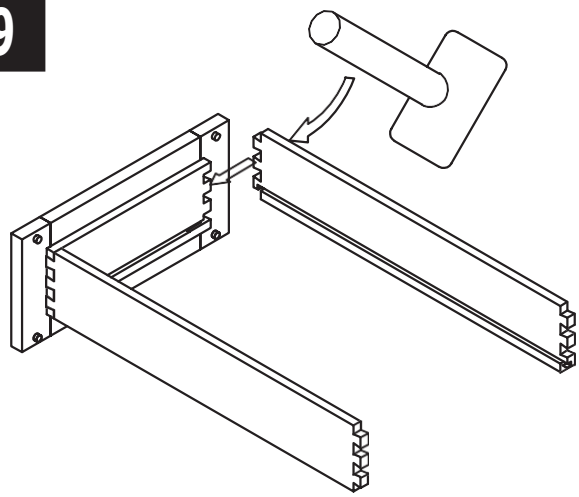

STEP 20

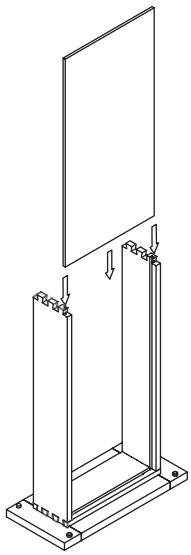

STEP 21

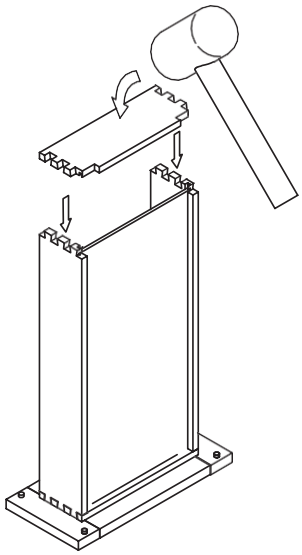

STEP 22

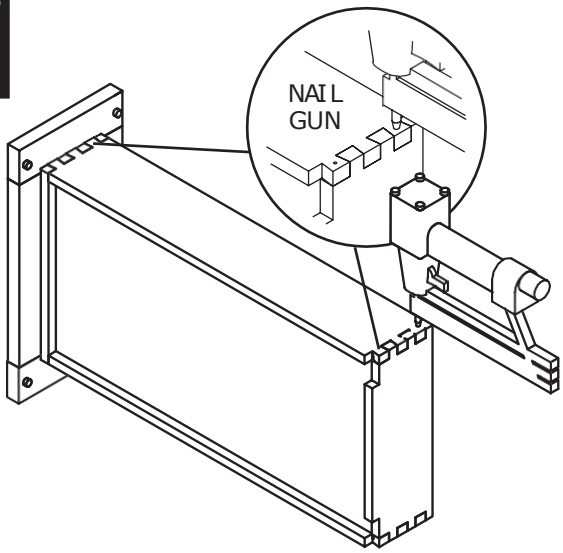

STEP 23

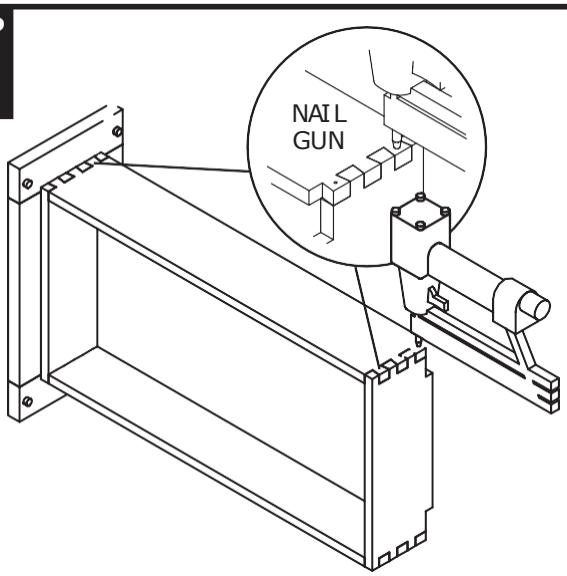

STEP 24

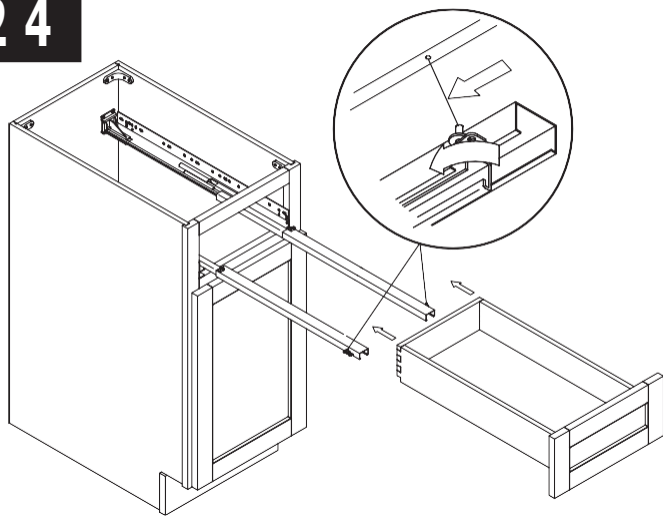

STEP 25

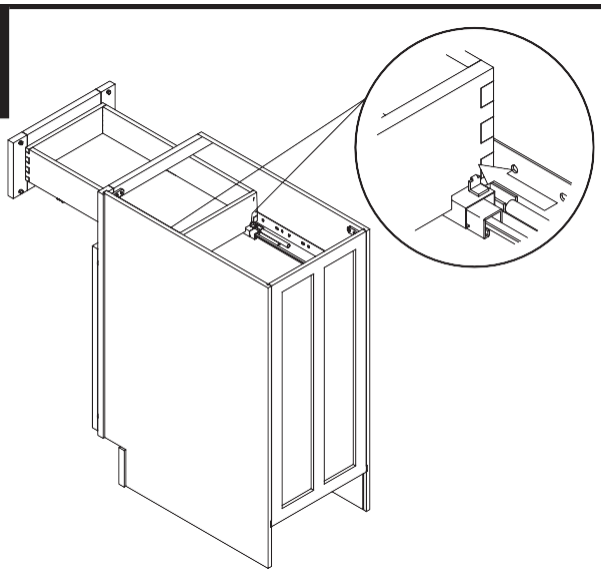

STEP 26

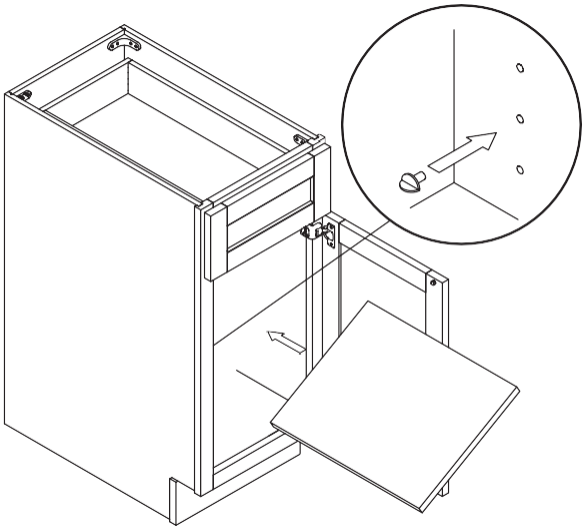

STEP 27

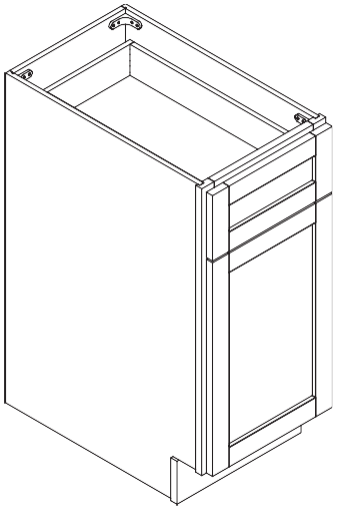

ASSEMBLING INSTRUCTIONS - LAZY SUSAN CABINET

TOP SUPPORT
BACK PANEL
BACK RIGHT SIDE PANEL
BACK LEFT SIDE PANEL
FACE FRAME
ROUND SHELVES
RIGHT SIDE PANEL
LEFT SIDE PANEL
DOOR FRONT
TOP LAZY SUSAN SUPPORT
TOE KICK

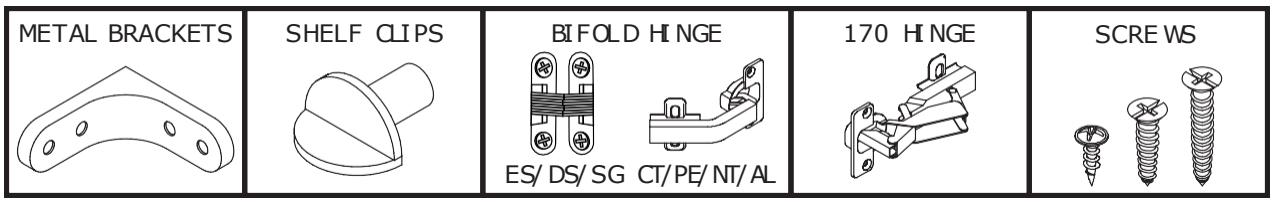

STEP 1

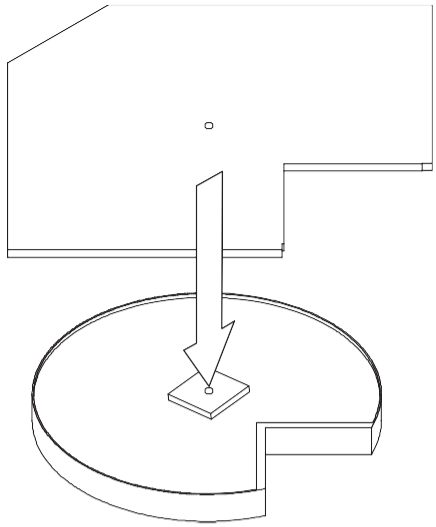

STEP 2

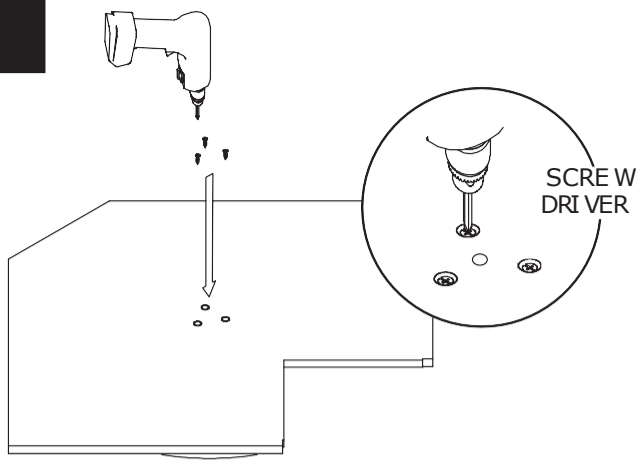

STEP 3

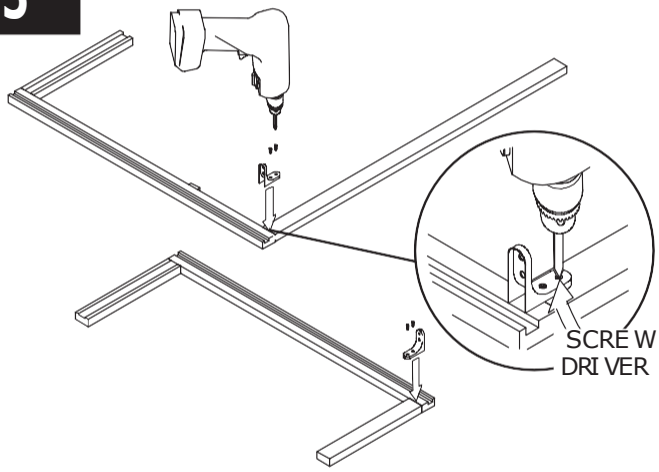

STEP 4

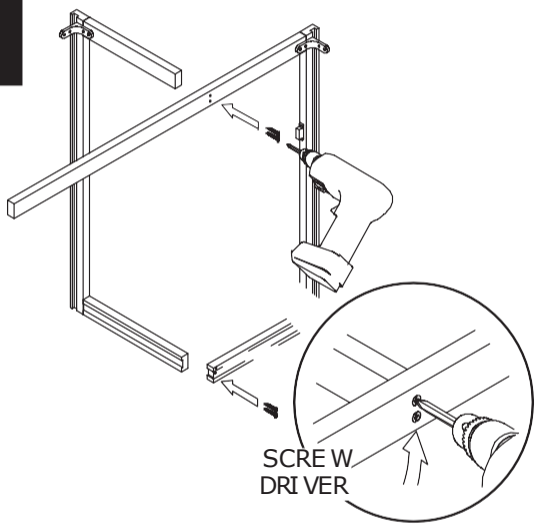

STEP 5

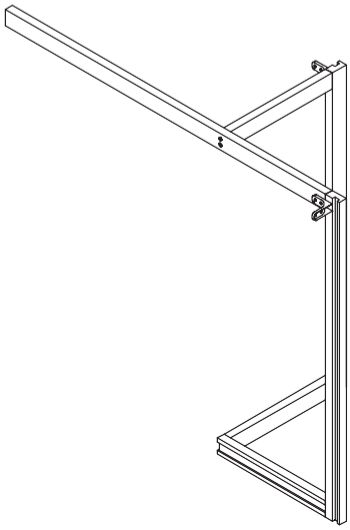

STEP 6

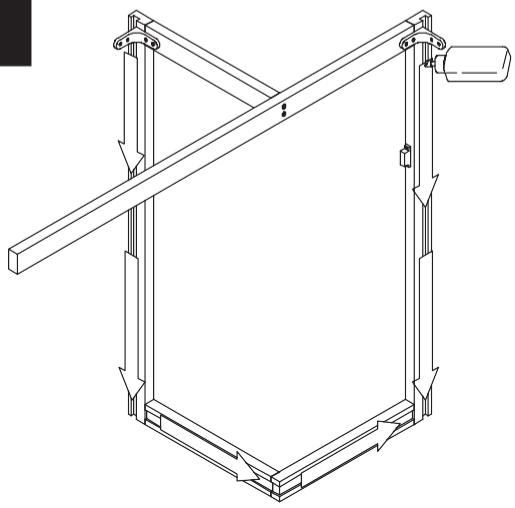

STEP 7

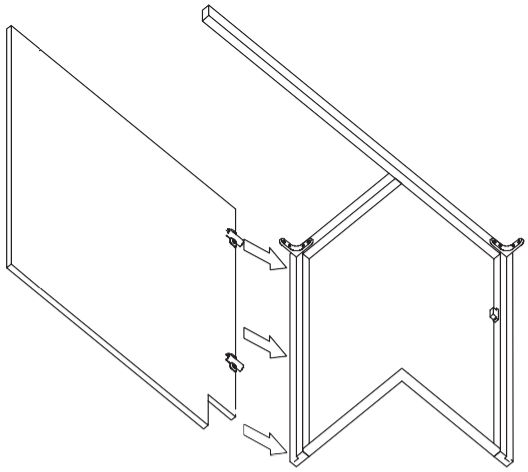

STEP 8

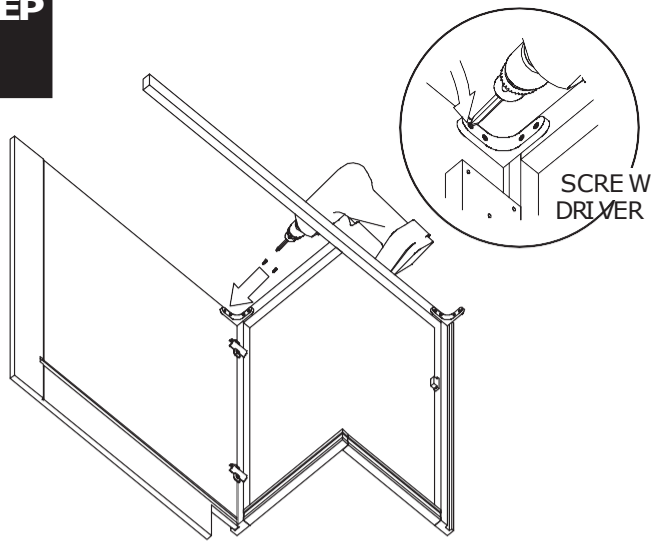

STEP 9

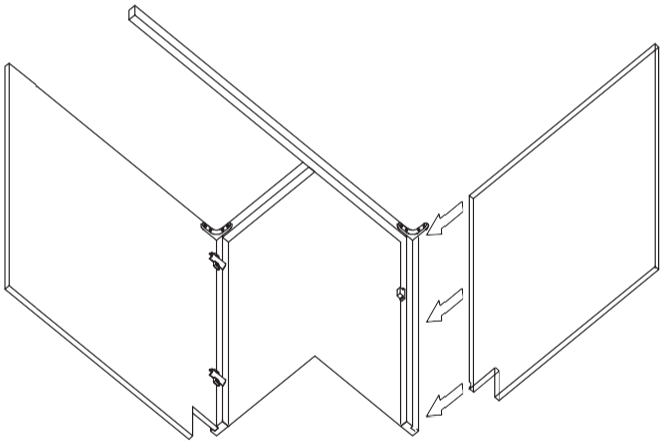

STEP 10

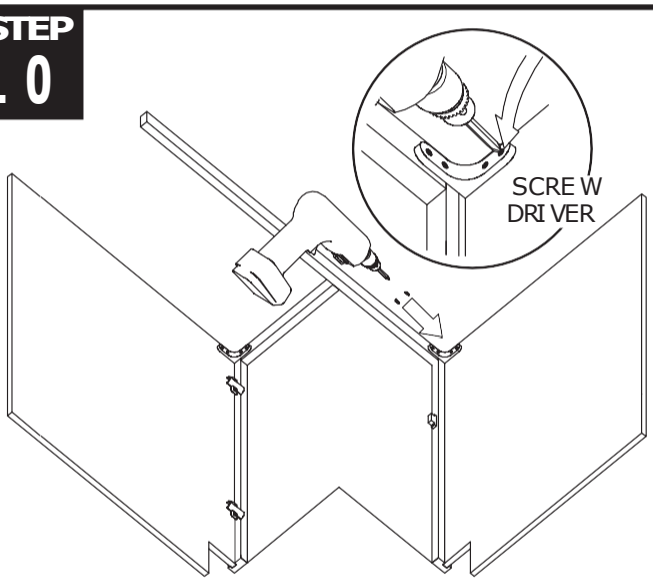

STEP 11

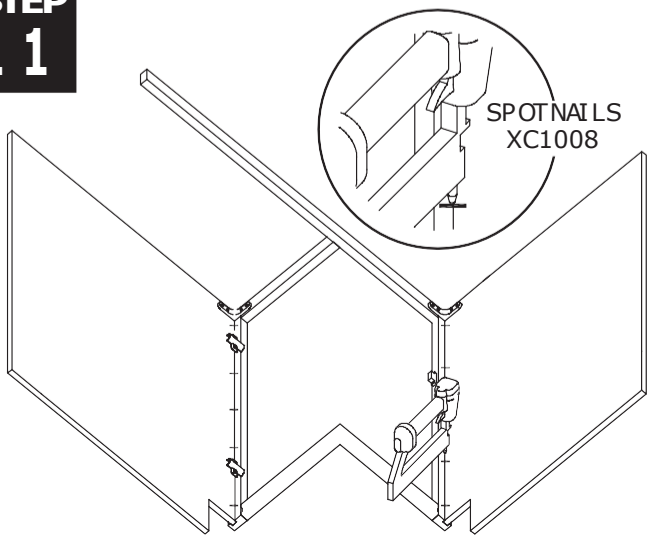

STEP 12

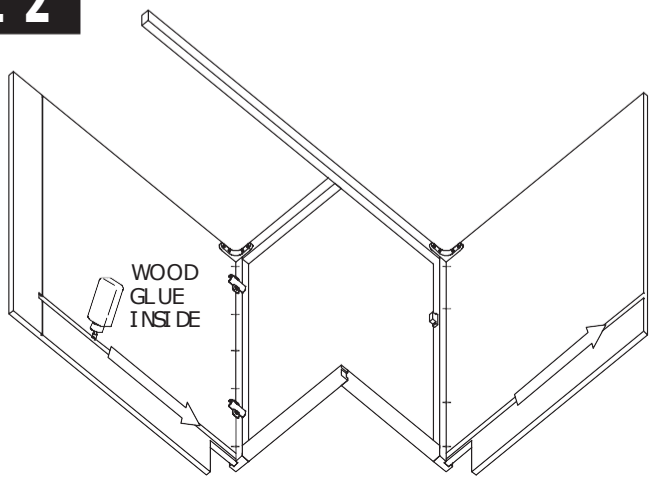

STEP 13

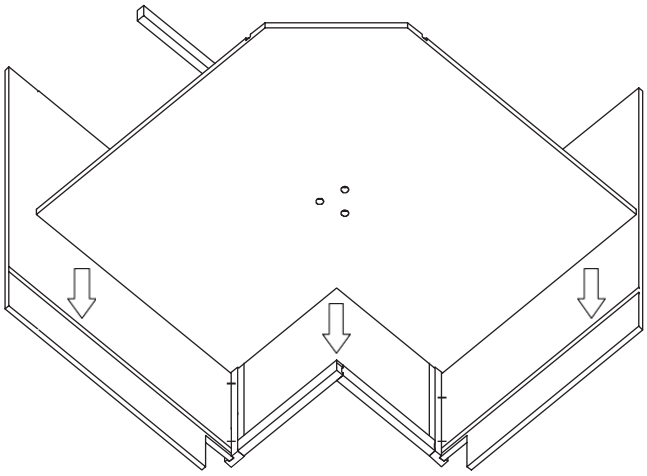

STEP 14

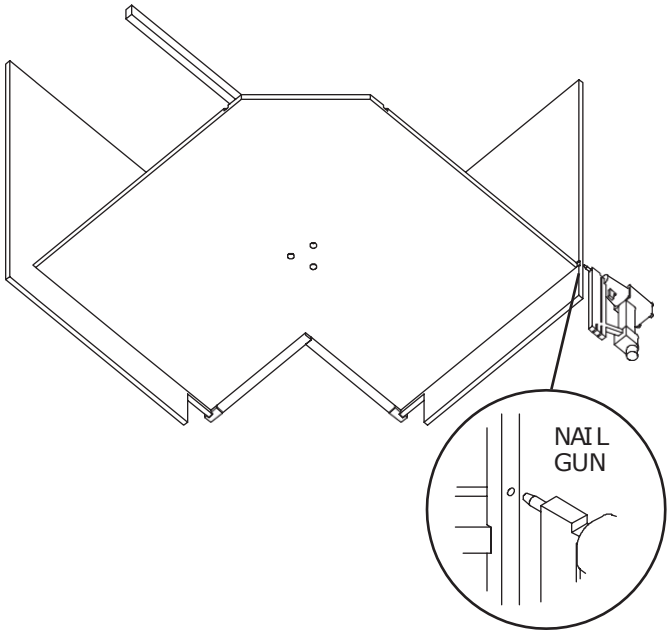

STEP 15

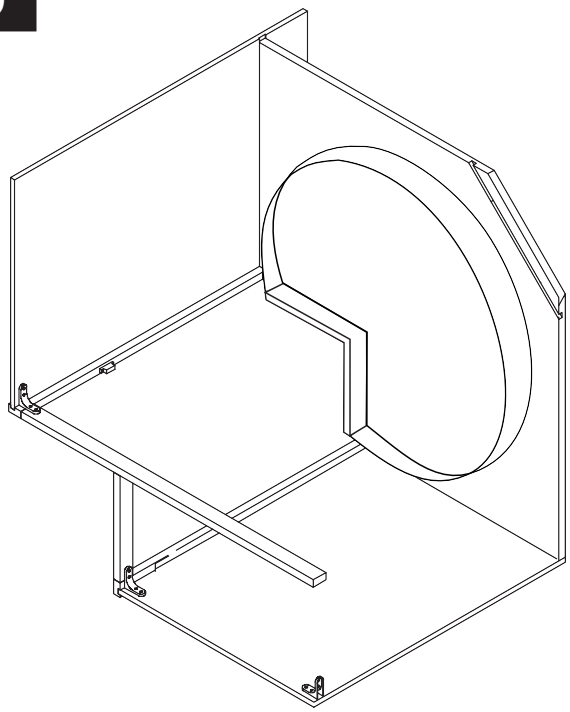

STEP 16

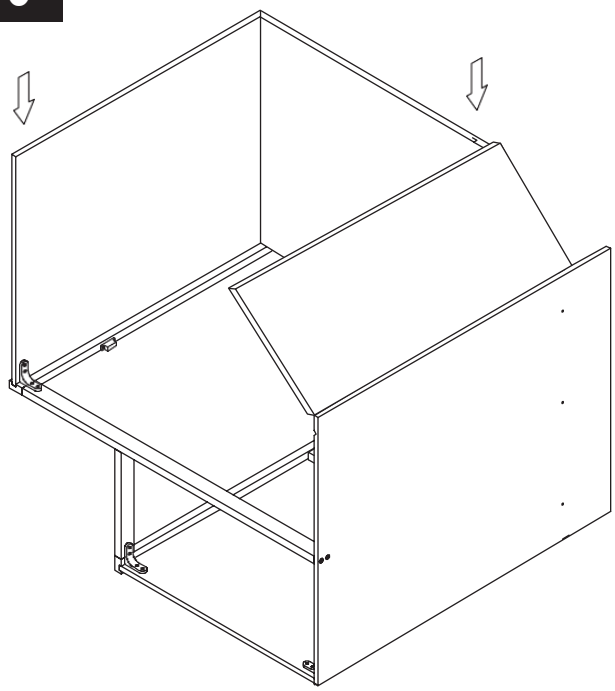

STEP 17

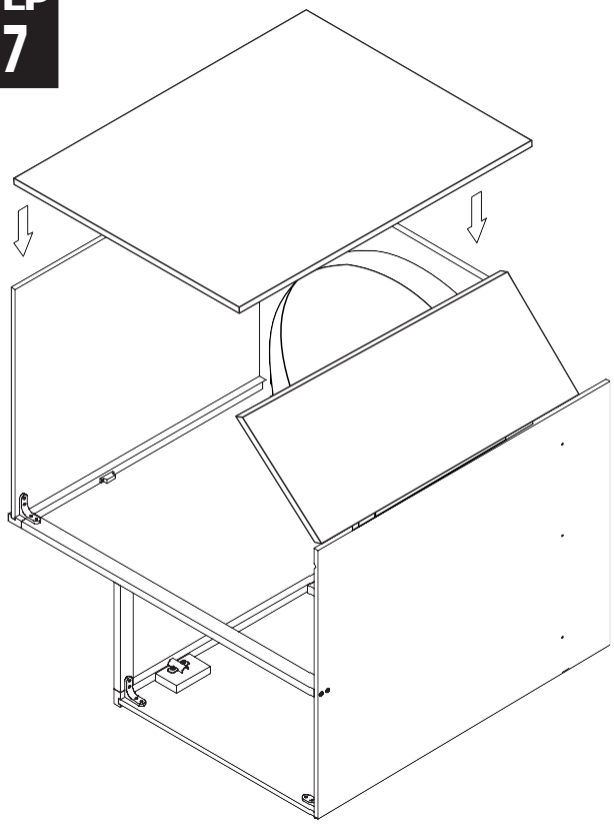

STEP 18

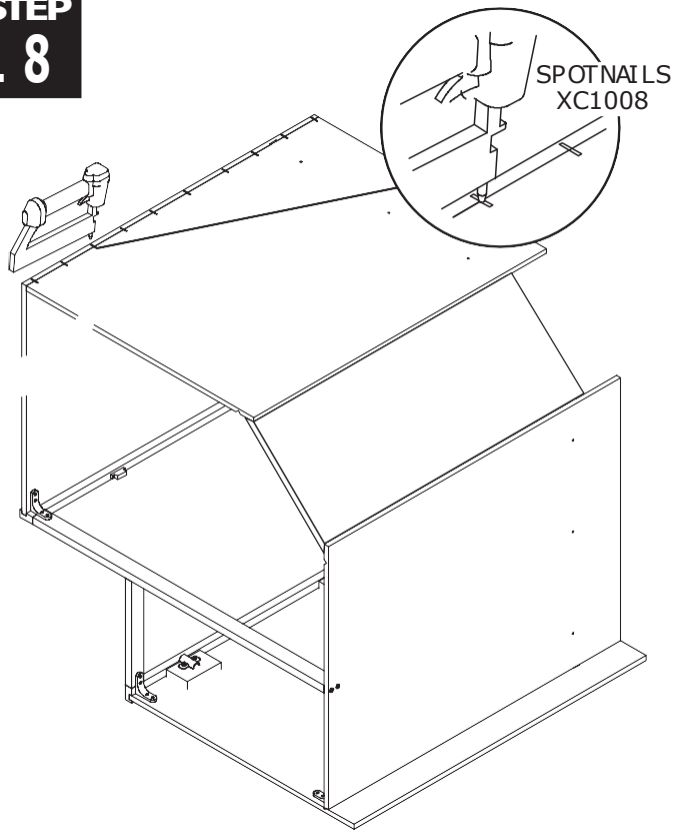

STEP 19

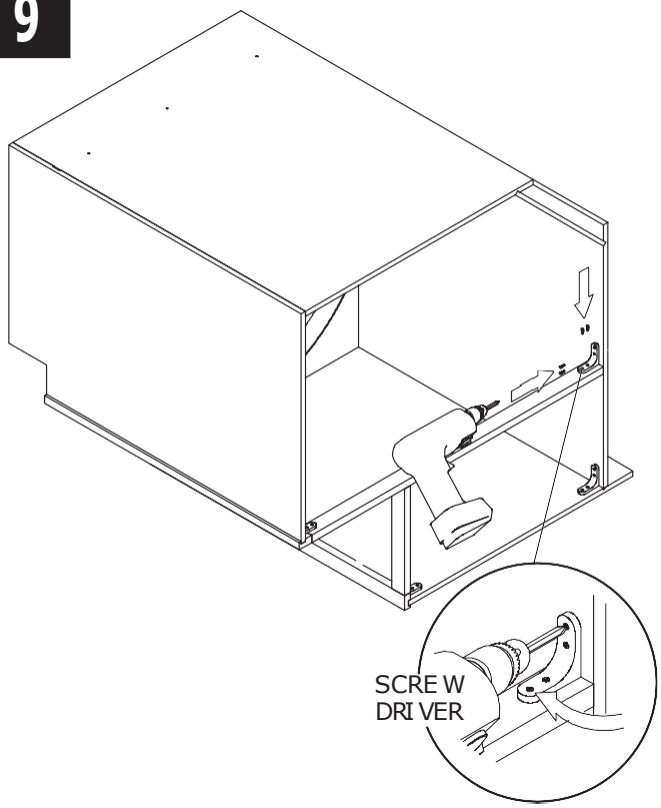

STEP 20

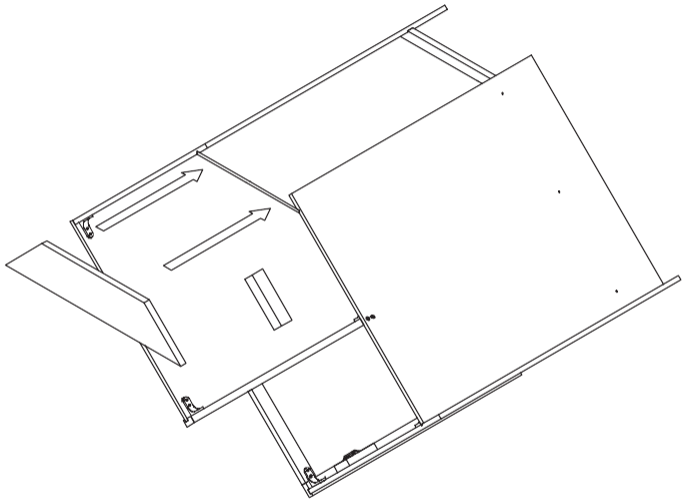

STEP 21

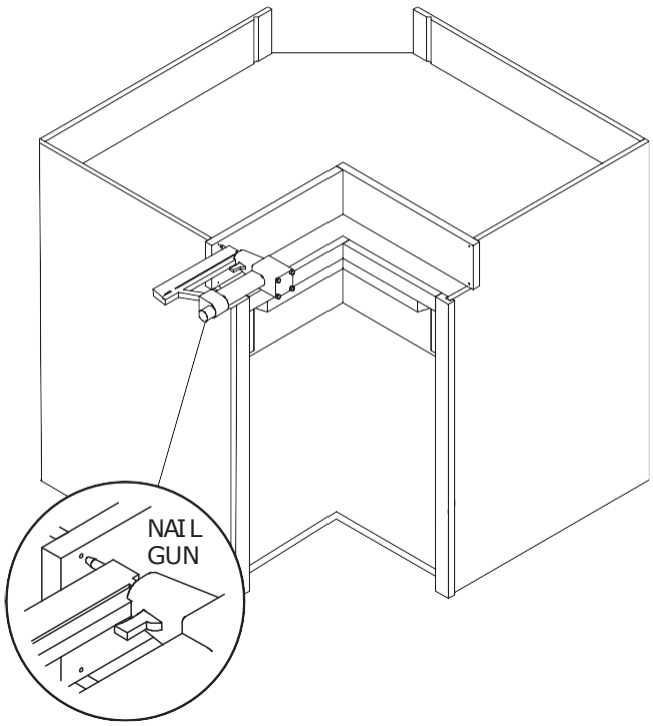

STEP 22

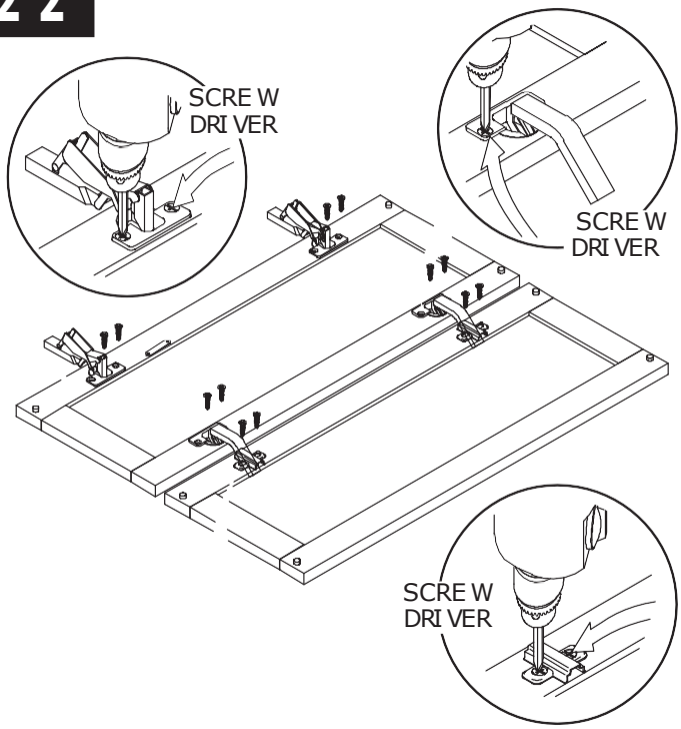

STEP 23

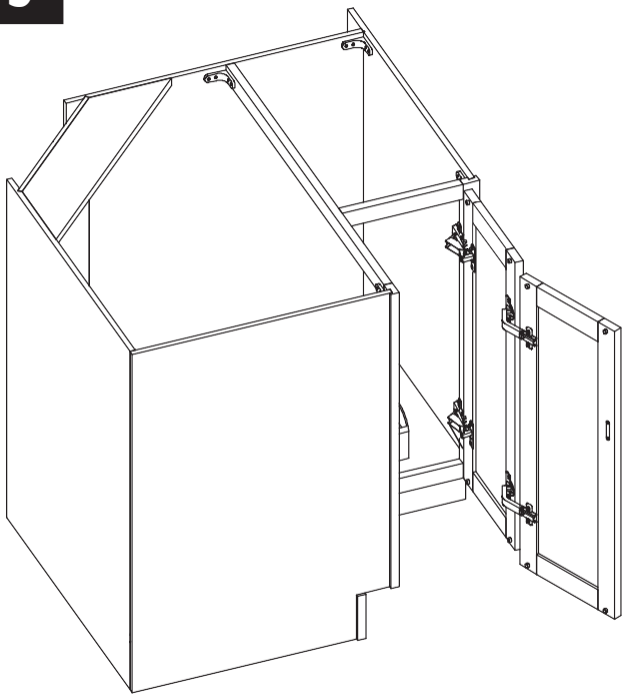

STEP 24

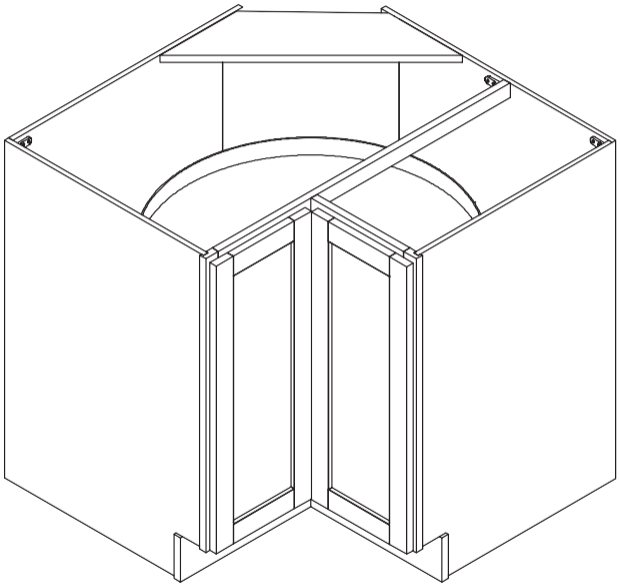

ASSEMBLING INSTRUCTIONS - BLIND CORNER BASE CABINET

DRAWER BACK
SIDE PANEL
BACK PANEL
DRAWER SIDE
DRAWER SIDE
DRAWER BOTTOM
ADJUSTABLE SHELF
DRAWER FRONT
DOOR FRONT
SIDE PANEL
FACE FRAME
BOTTOM PANEL
TOE KICK

GLIDES	METAL BRACKETS	SCREWS	SHELF CLIPS	GLIDE SUPPORTS
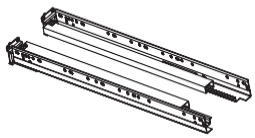	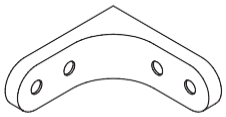	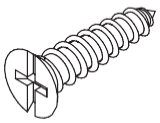	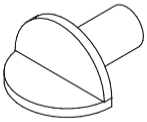	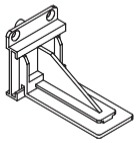

TOOLS

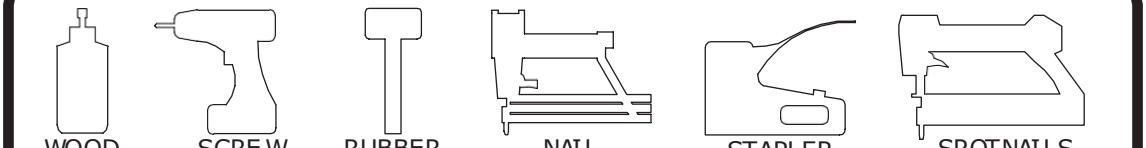

WOOD GLUE | SCREW DRIVER | RUBBER MALLET | NAIL GUN | STAPLER | SPOTNAILS XC1008

BLIND CORNER BASE CABINET

STEP 1

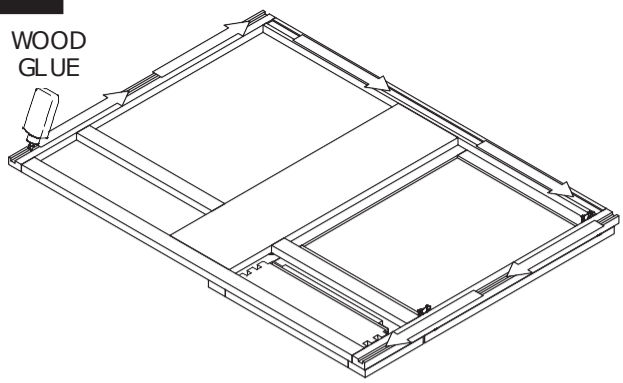

STEP 2

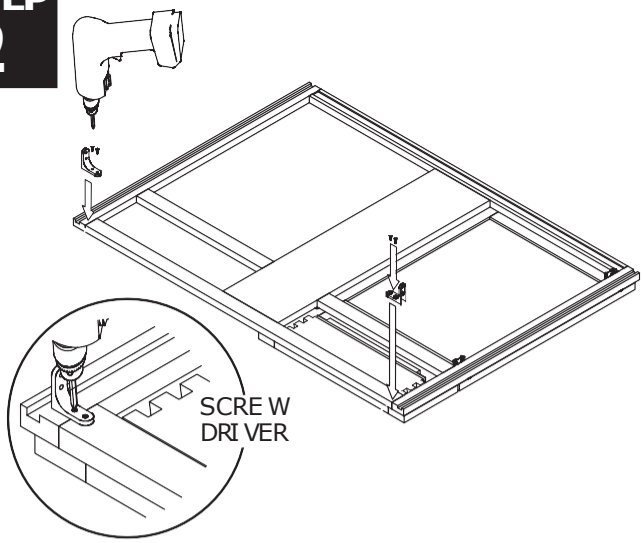

STEP 3

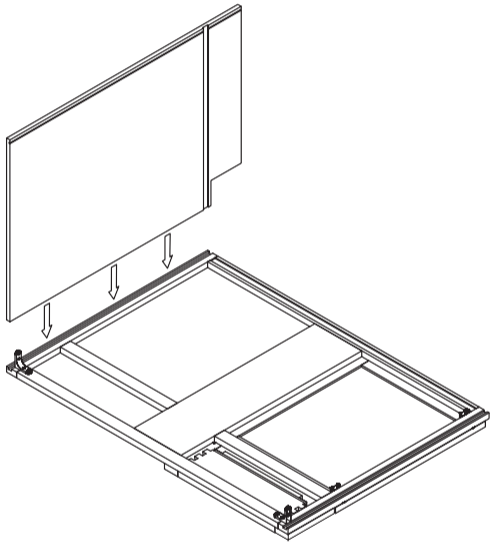

STEP 4

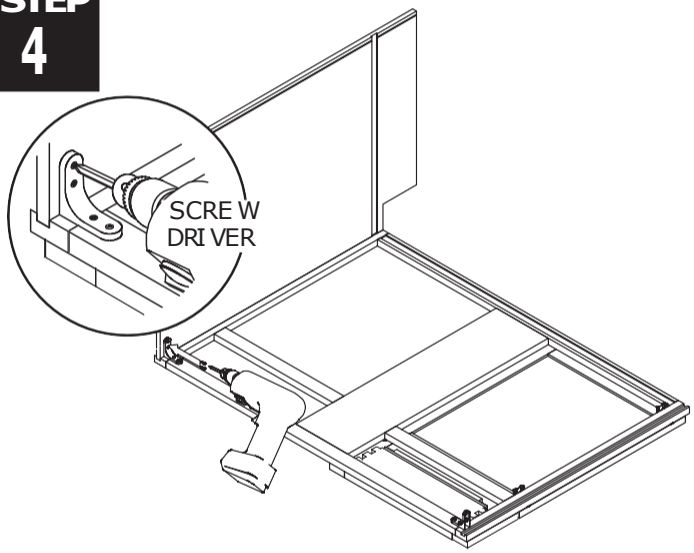

STEP 5

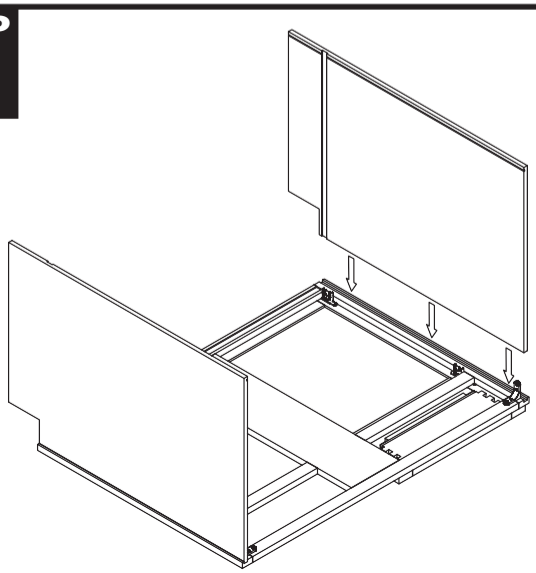

STEP 6

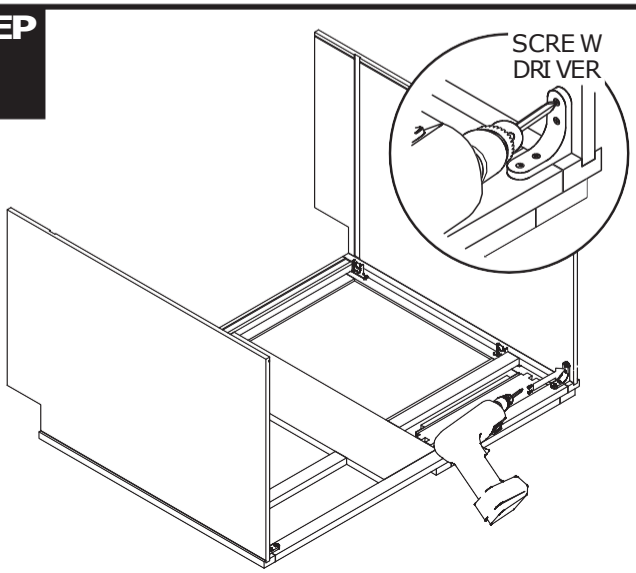

STEP 7

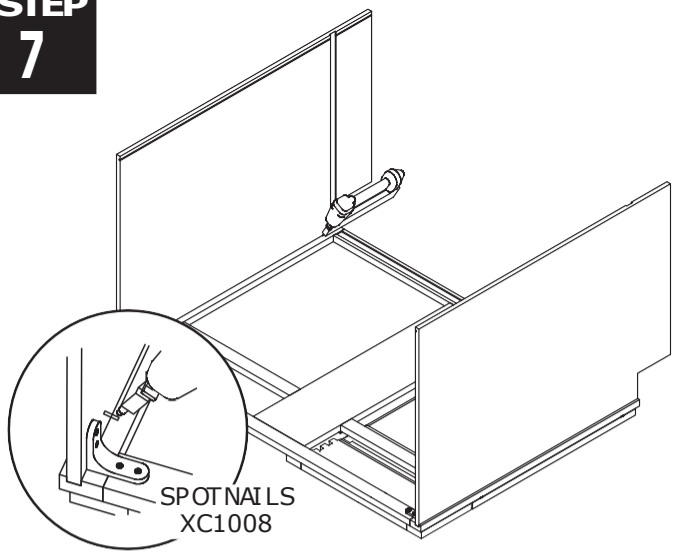

STEP 8

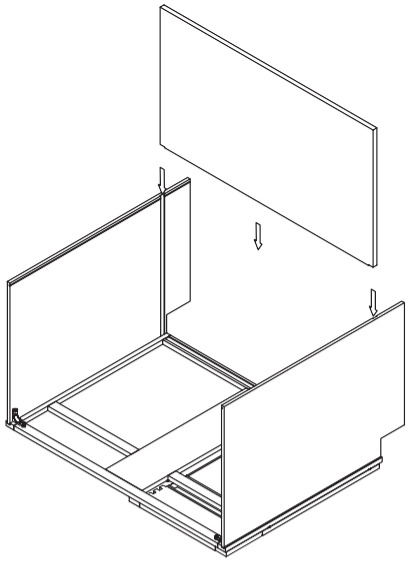

STEP 9

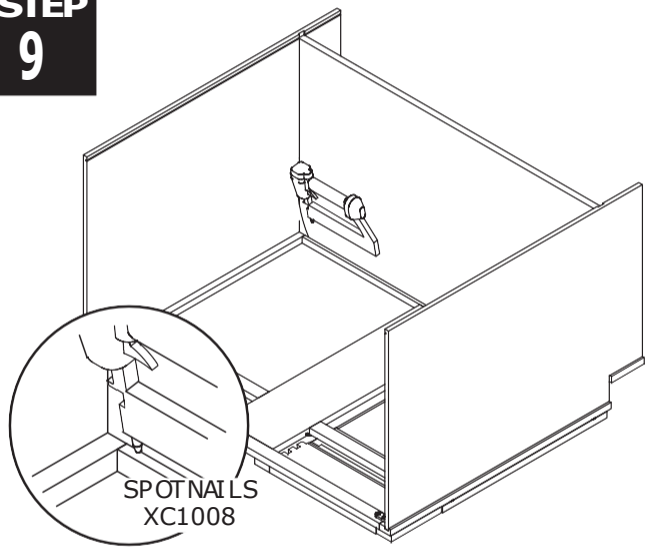

STEP 10

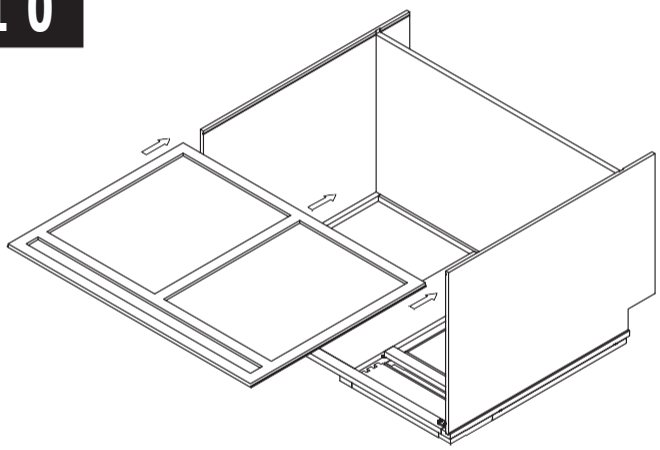

STEP 11

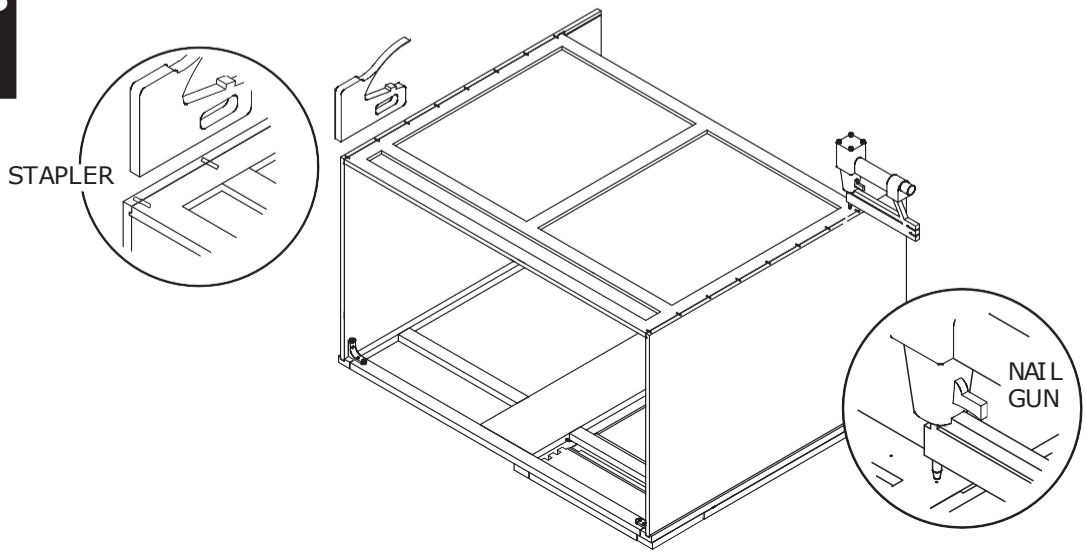

STEP 12

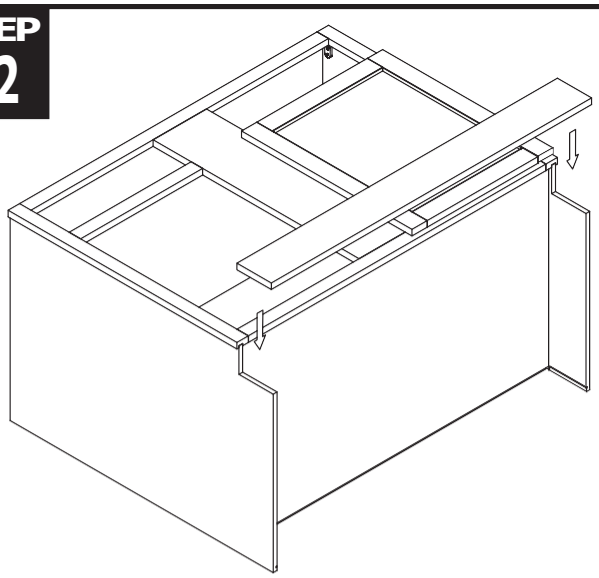

STEP 13

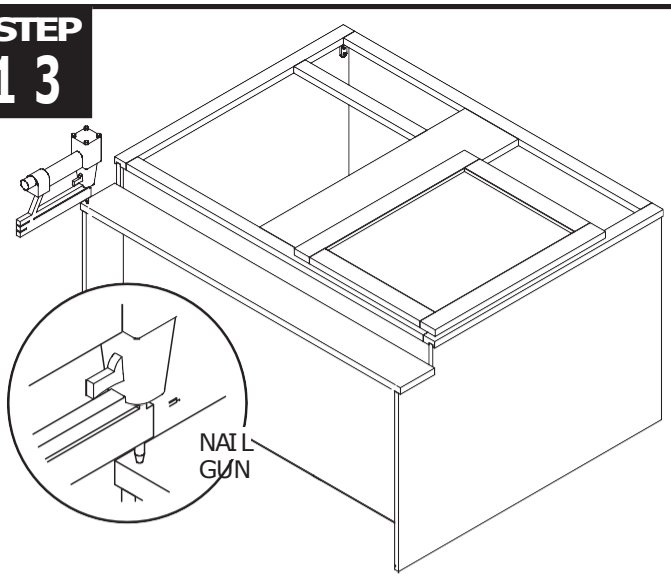

STEP 14

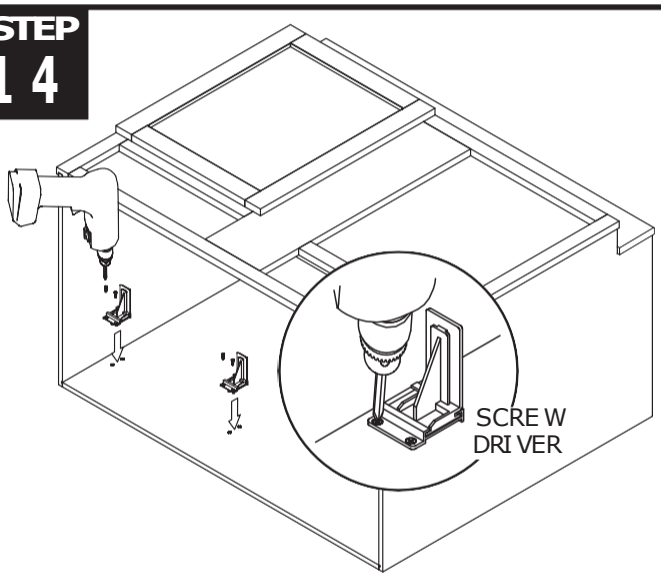

STEP 15

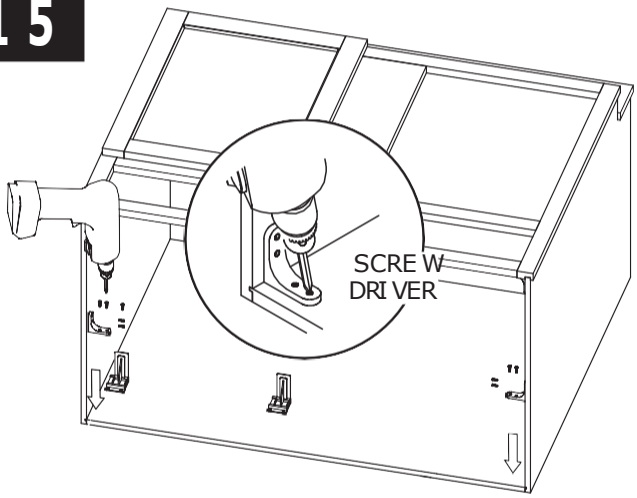

STEP 16

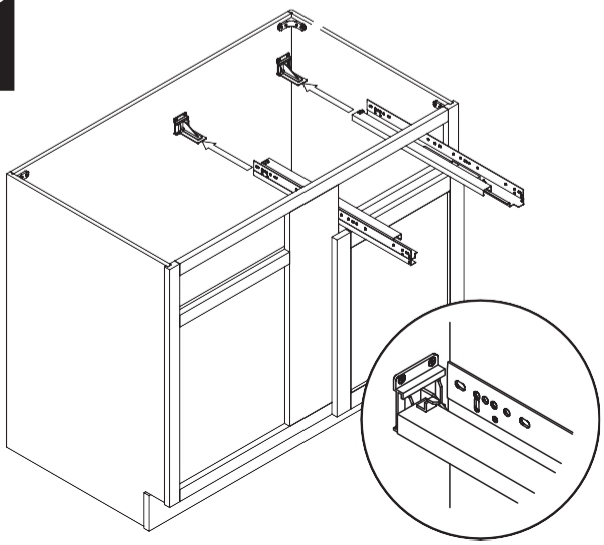

STEP 17

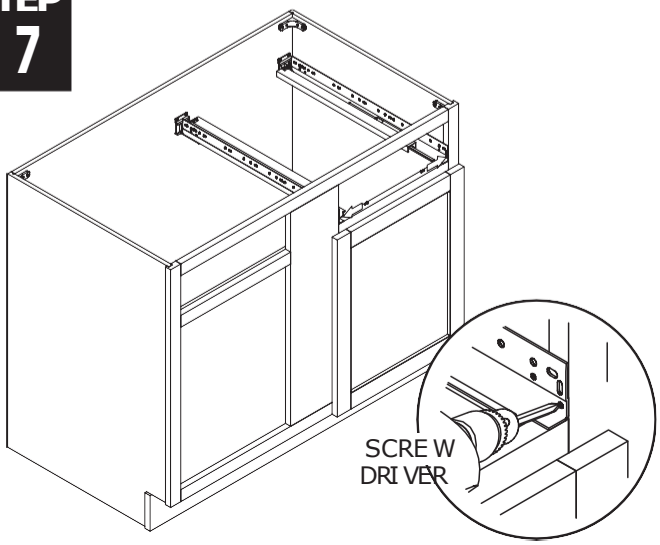

STEP 18

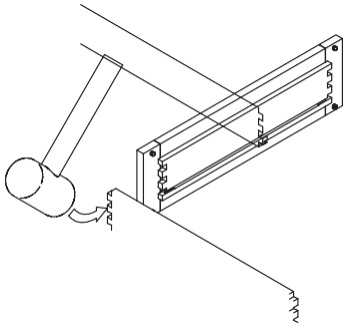

STEP 19

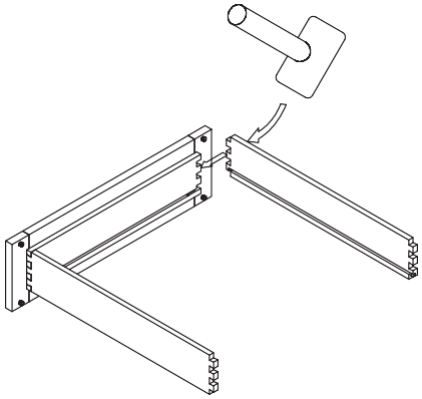

STEP 20

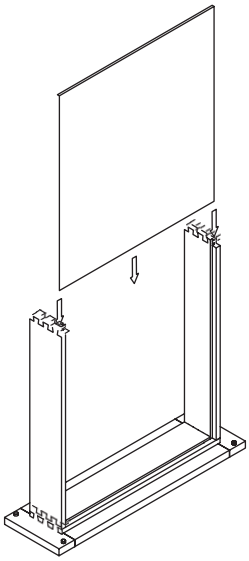

STEP 21

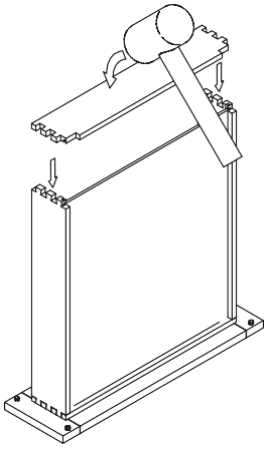

STEP 22

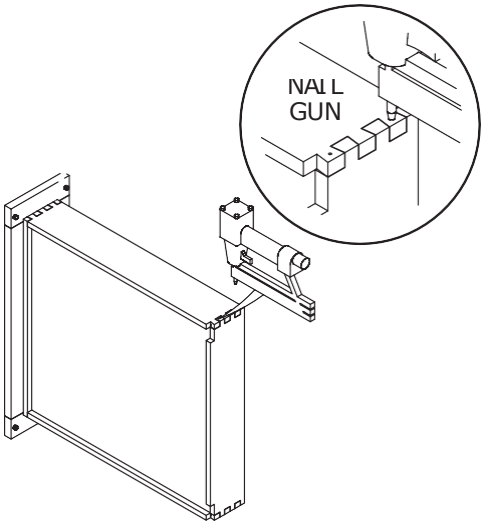

STEP 23

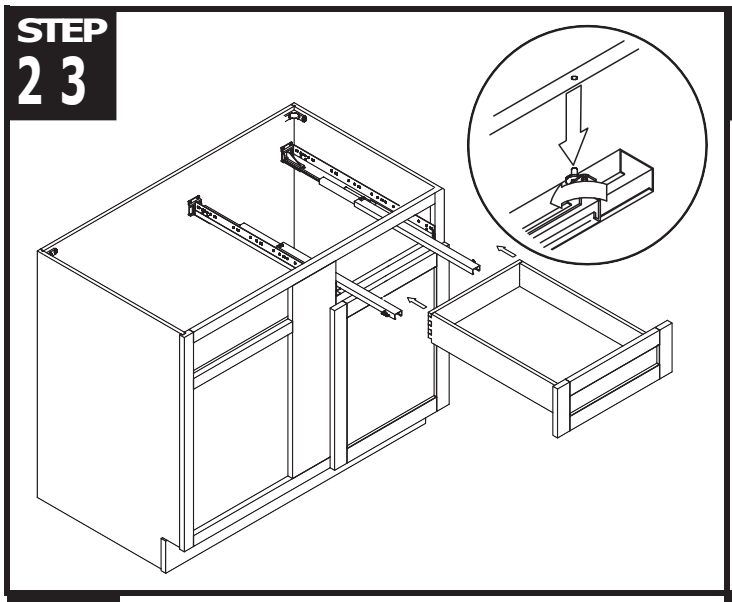

STEP 24

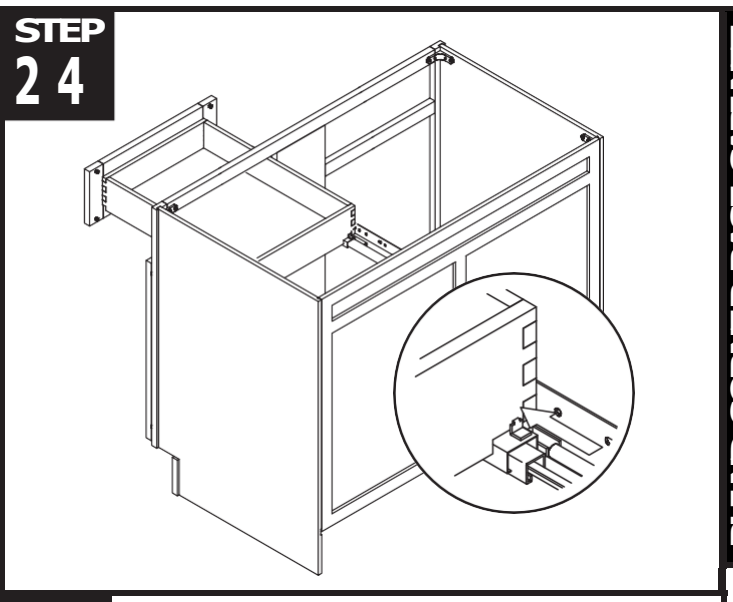

STEP 25

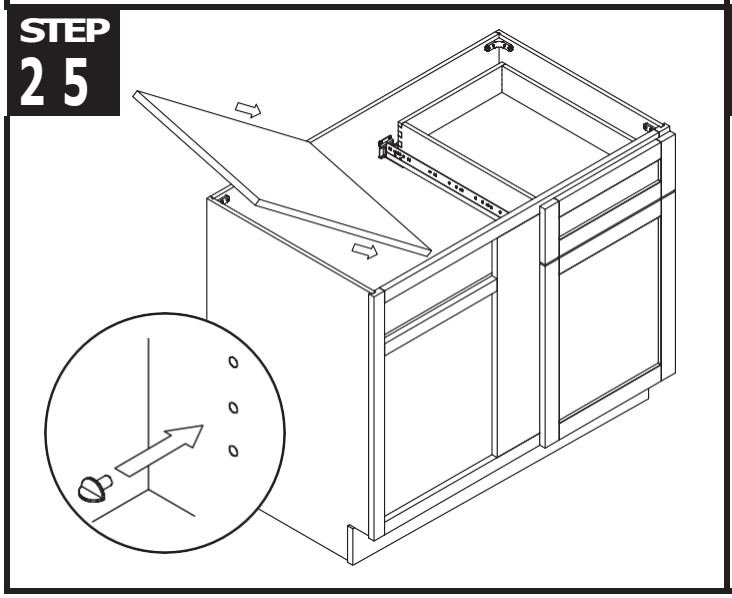

STEP 26

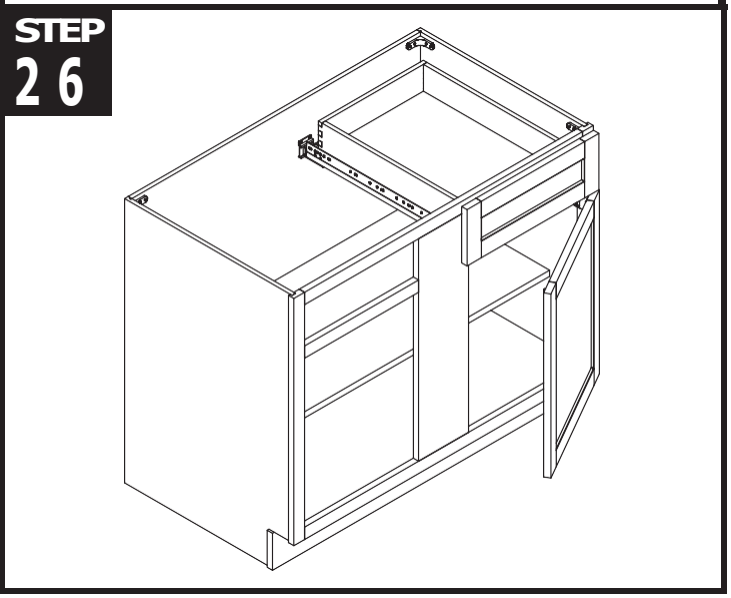

ASSEMBLING INSTRUCTIONS - BASE 3 DRAWERS

DRAWER BOTTOM
SIDE PANEL
DRAWER BACK
DRAWER SIDE
BACK PANEL
FACE FRAME
SIDE PANEL
DRAWER FRONT
DRAWER SIDE
BOTTOM PANEL
TOE KICK

GLIDES	METAL BRACKETS	SCREWS	GLIDE SUPPORTS

TOOLS

WOOD GLUE	SCREW DRIVER	RUBBER MALLET	NAIL GUN	STAPLER	SPOTNAILS XC1008

STEP 1

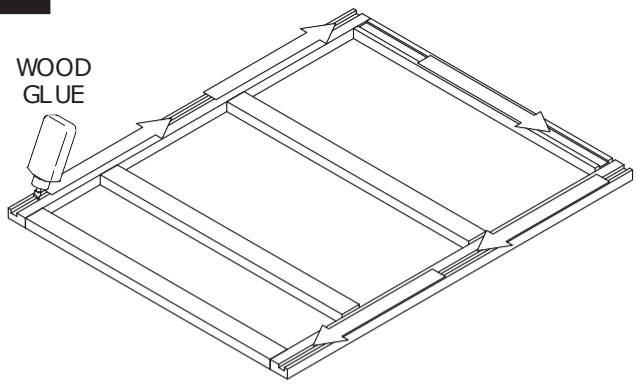

STEP 2

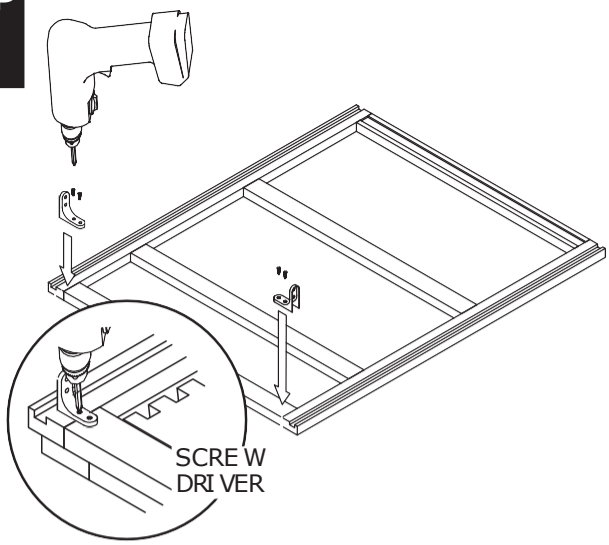

STEP 3

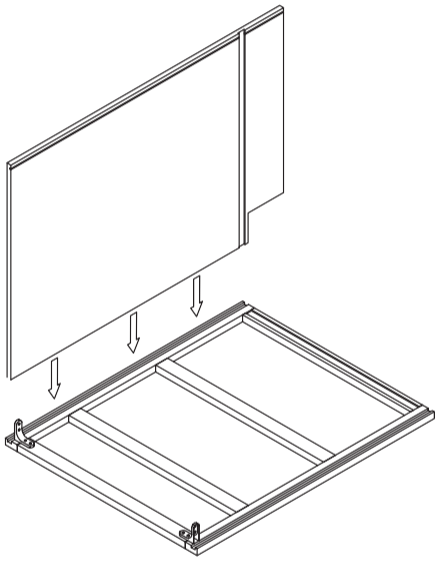

STEP 4

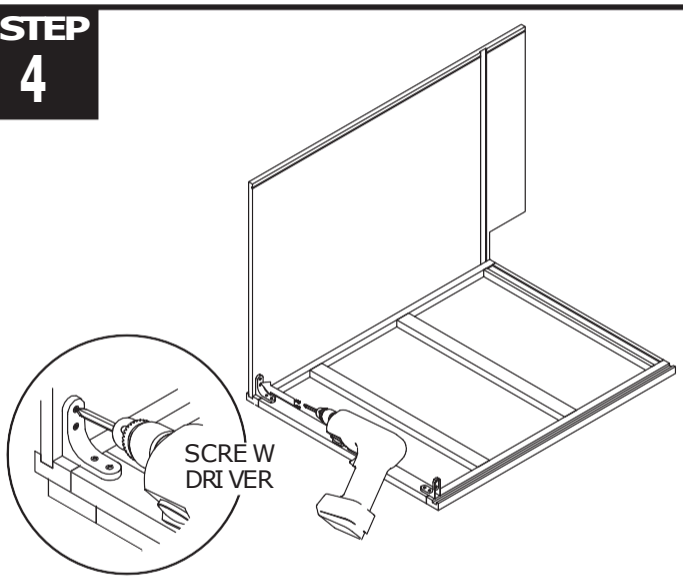

STEP 5

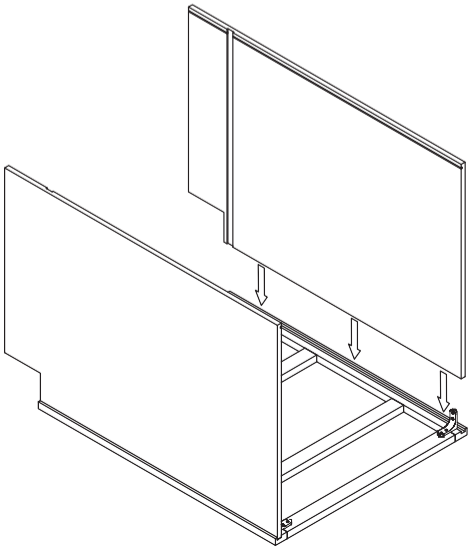

STEP 6

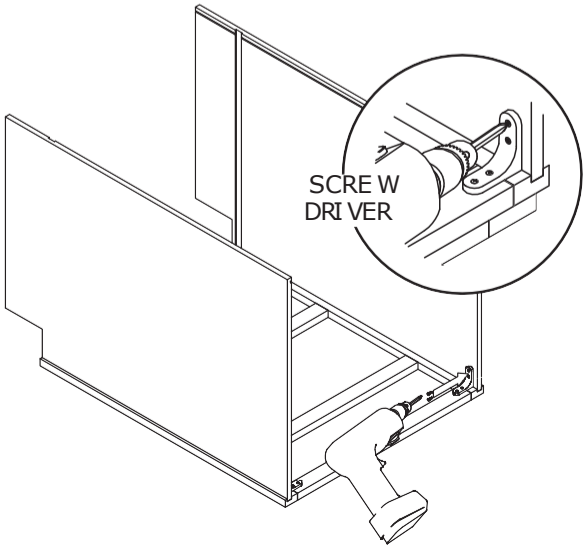

STEP 7

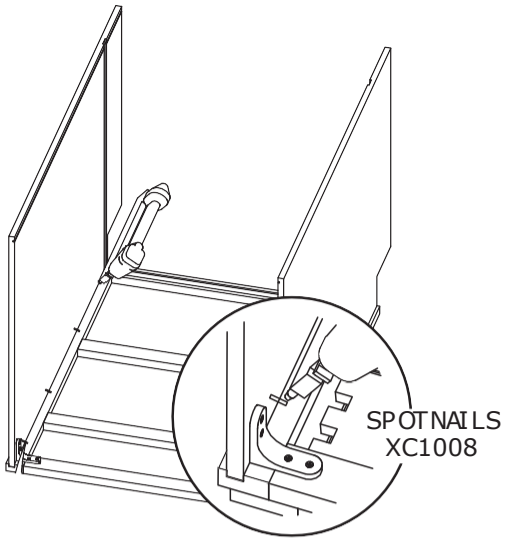

STEP 8

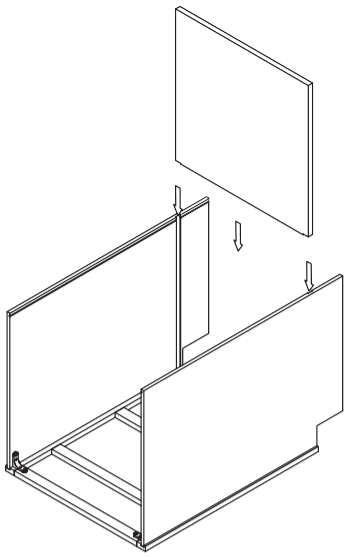

STEP 9

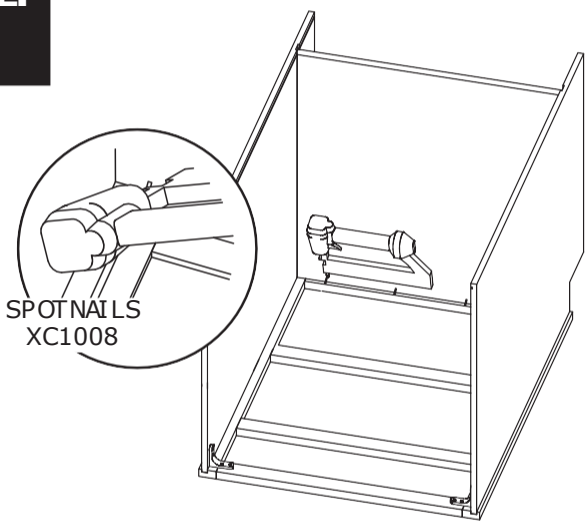

STEP 10

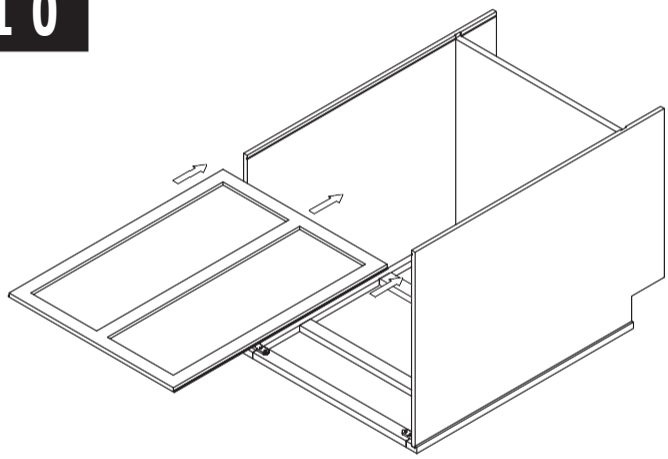

STEP 11

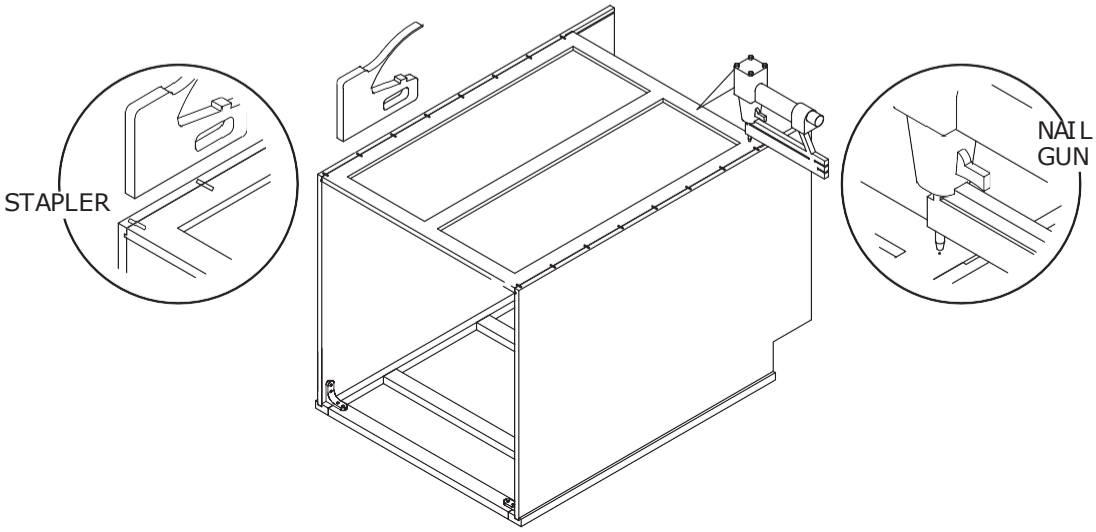

STEP 12

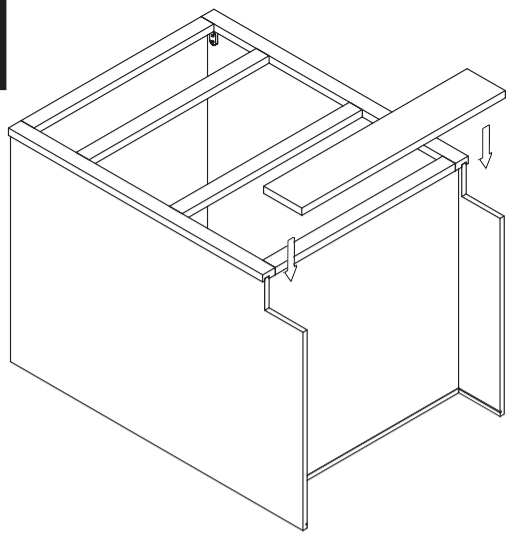

STEP 13

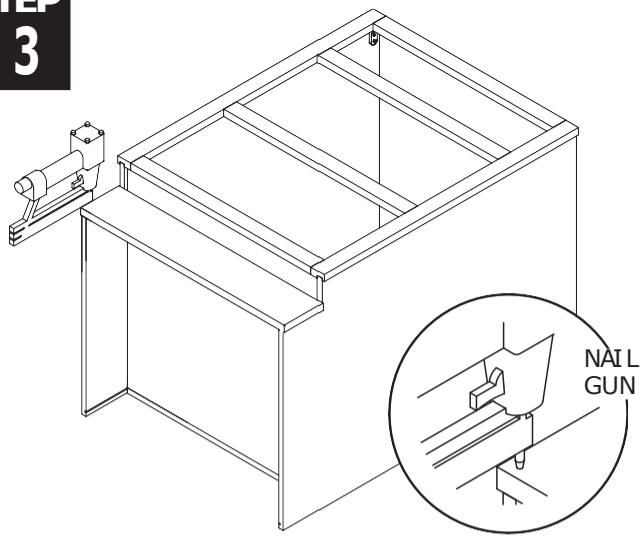

STEP 14

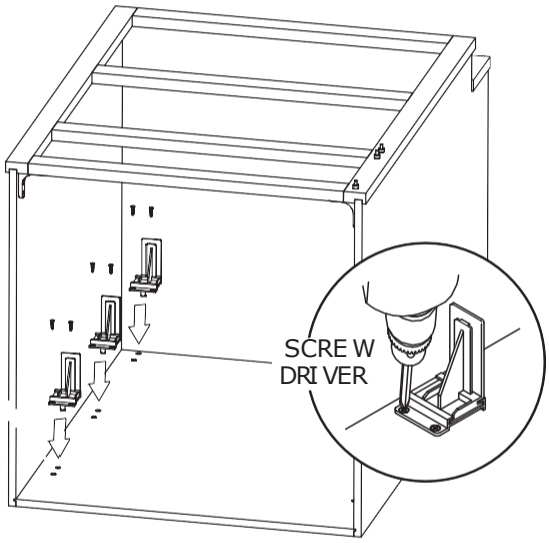

STEP 15

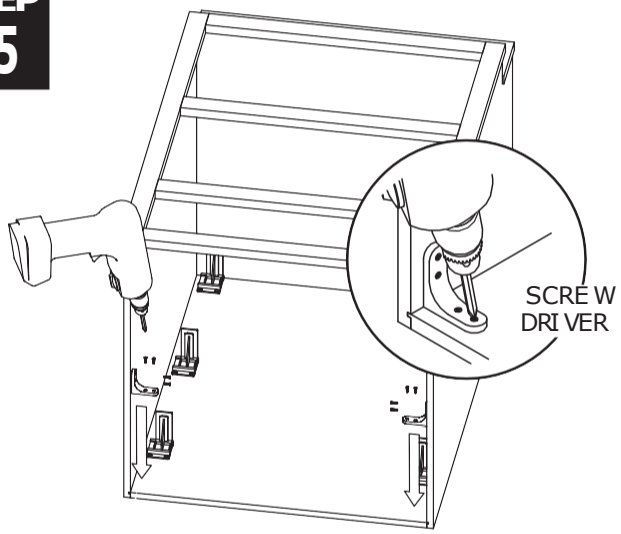

STEP 16

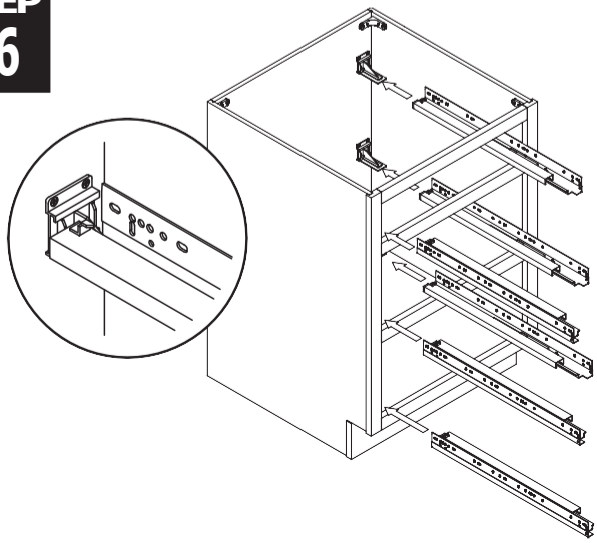

STEP 17

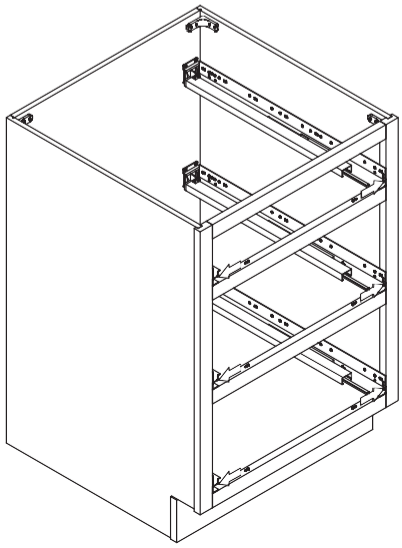

STEP 18

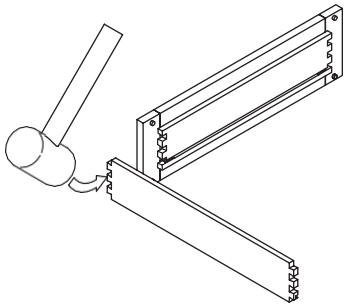

STEP 19

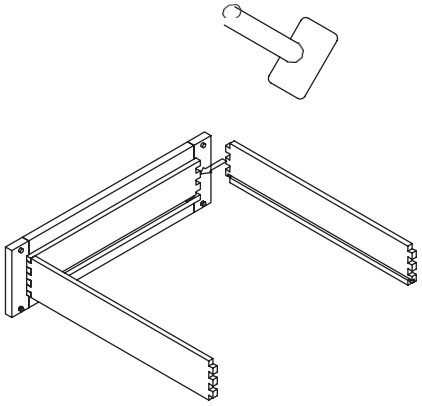

STEP 20

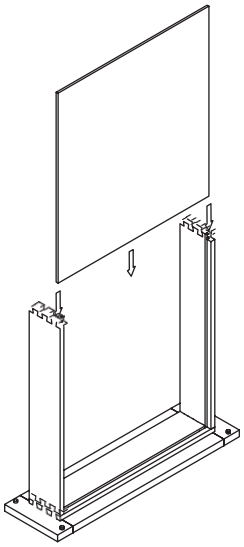

STEP 21

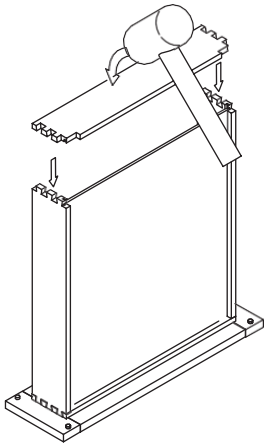

STEP 22

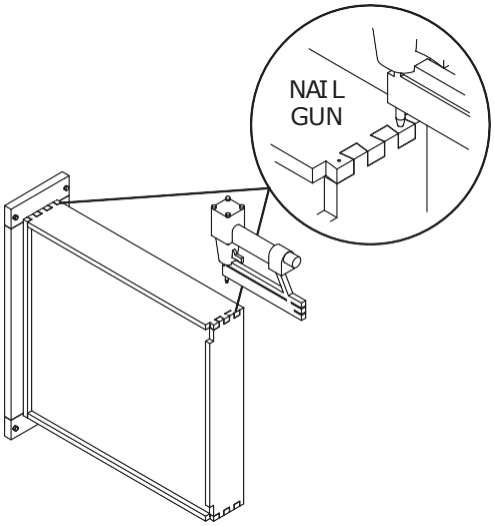

BASE 3 DRAWERS

STEP 23

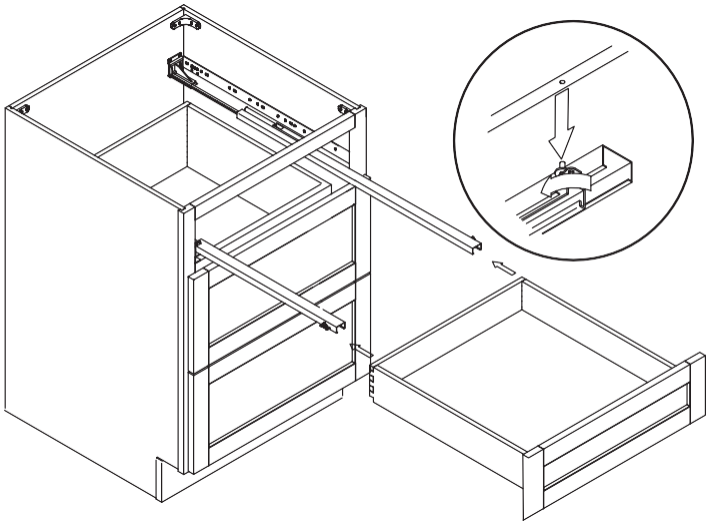

STEP 24

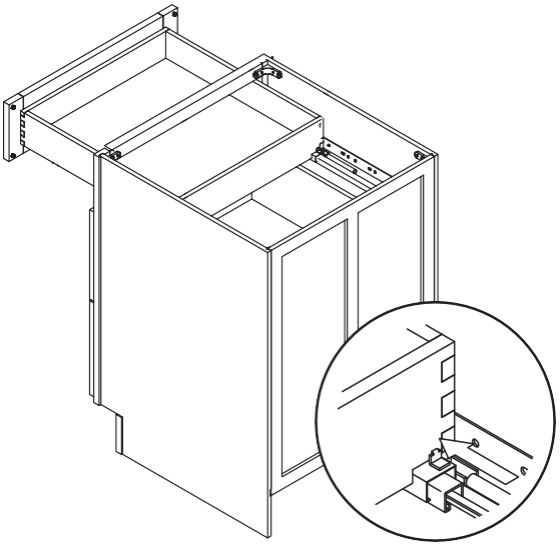

STEP 25

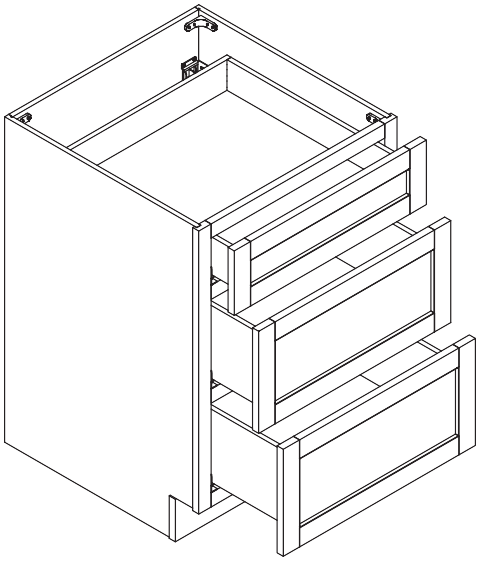

ASSEMBLING INSTRUCTIONS - WALL CABINET

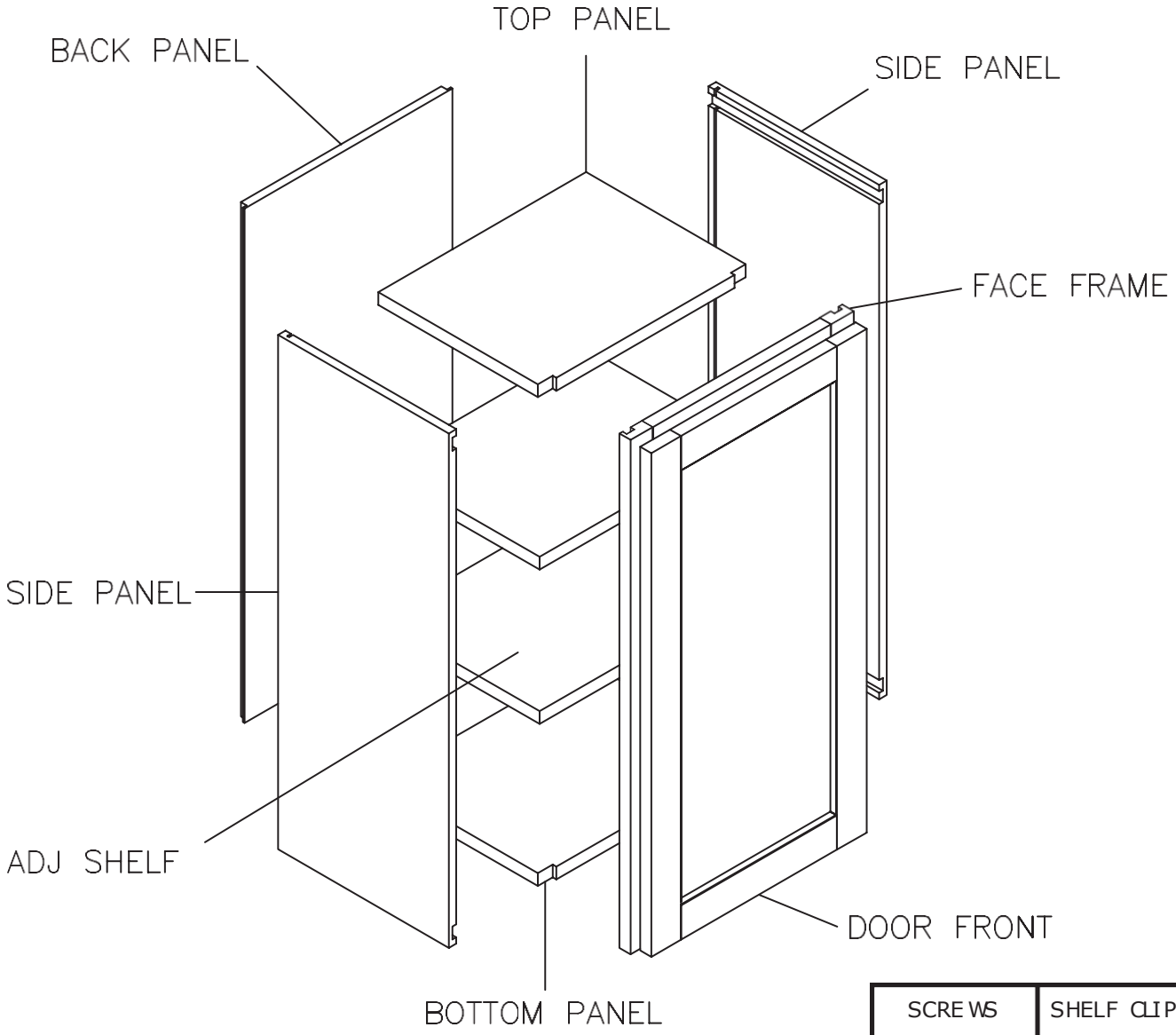

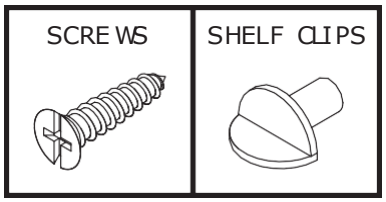

TOOLS

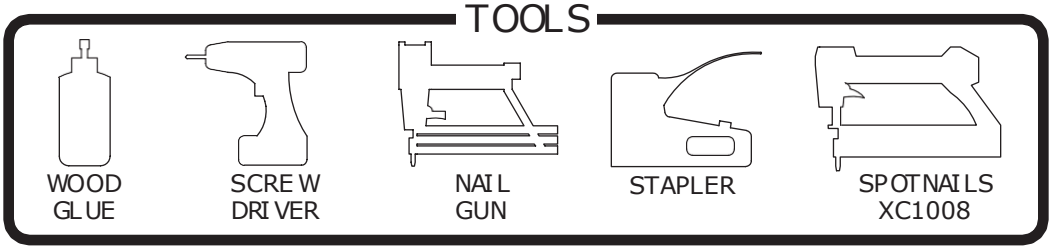

STEP 1

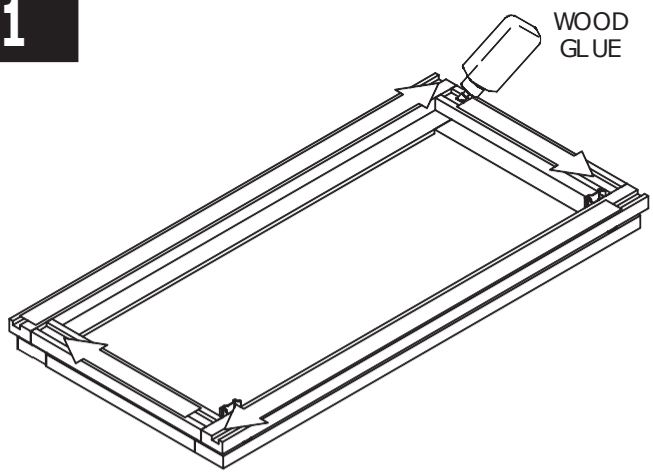

STEP 2

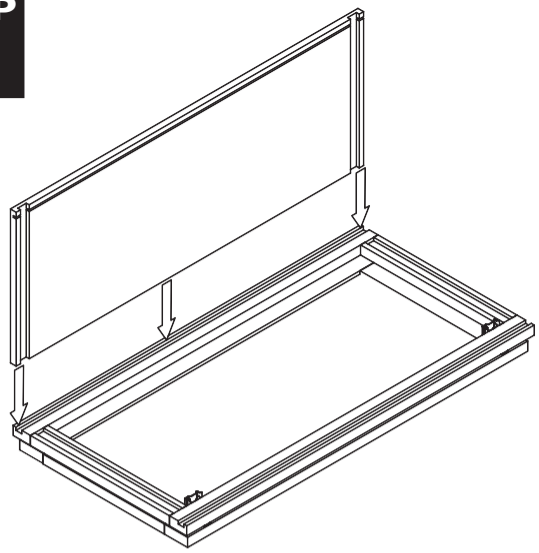

STEP 3

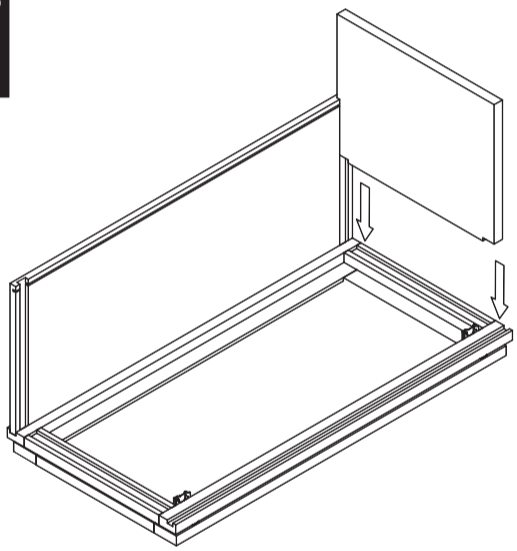

STEP 4

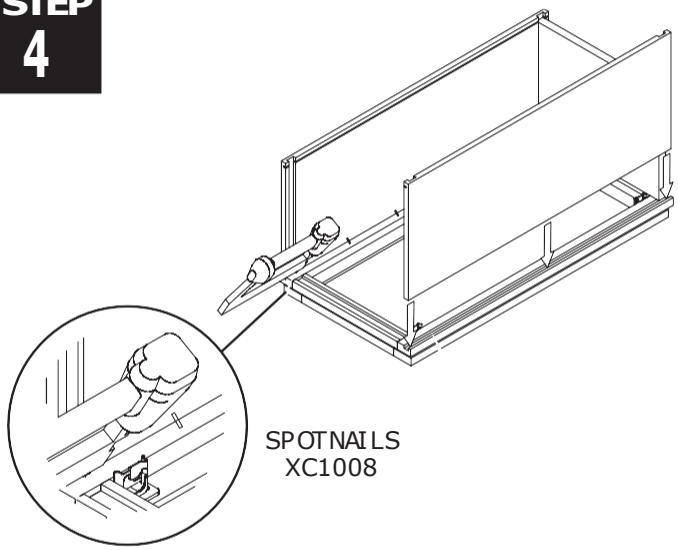

STEP 5

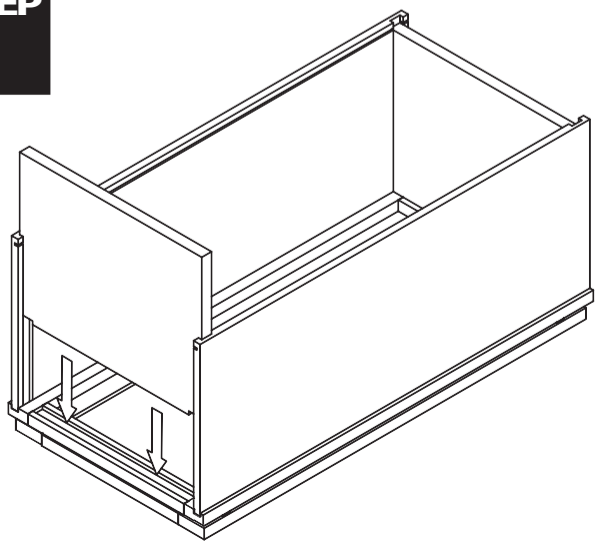

STEP 6

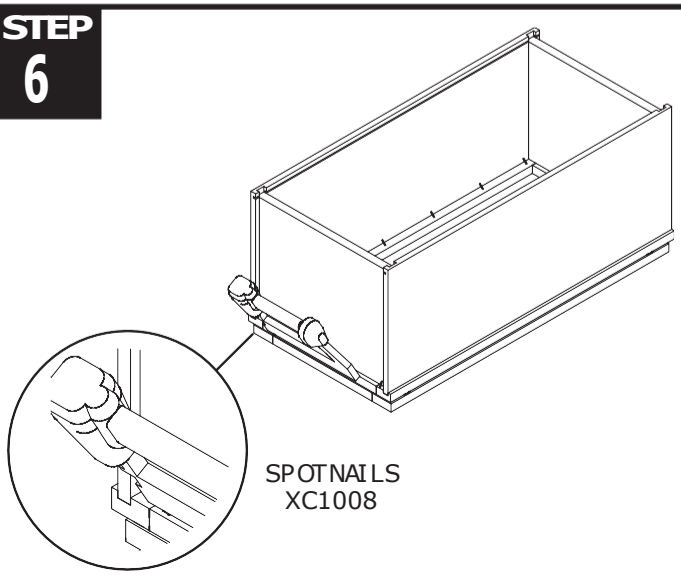

STEP 7

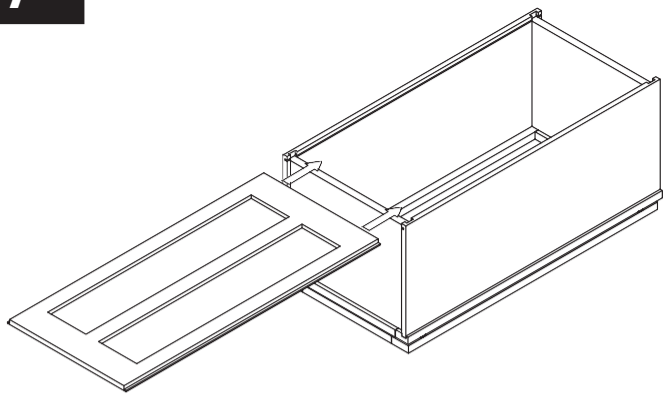

STEP 8

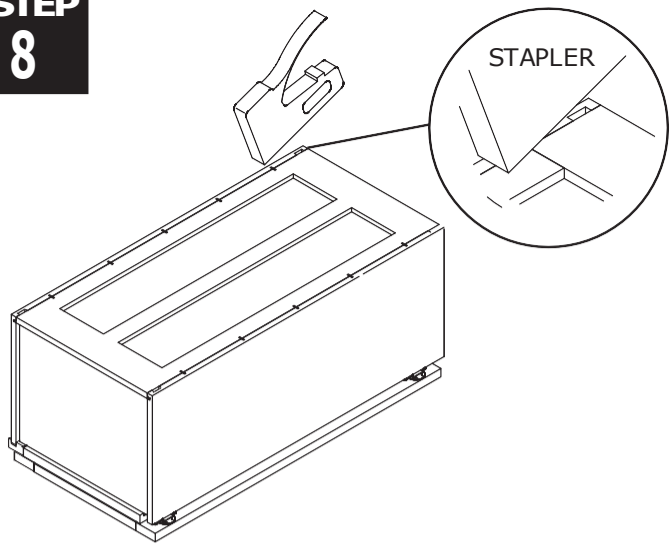

STEP 9

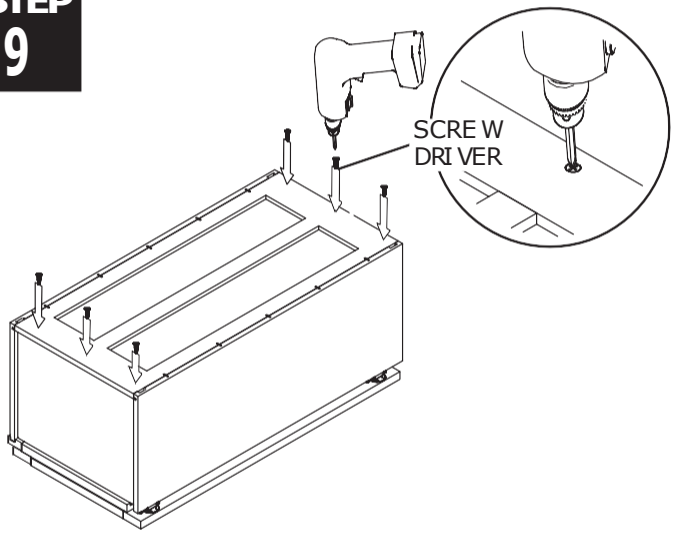

STEP 10

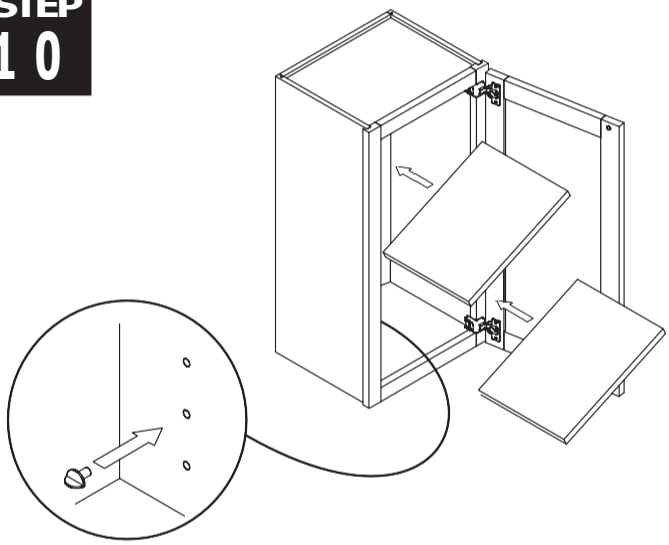

STEP 11

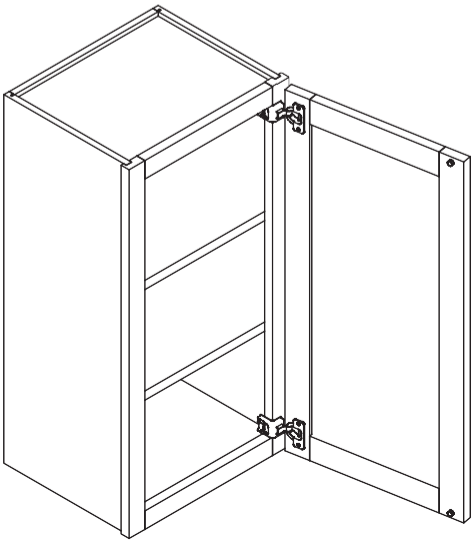

ASSEMBLING INSTRUCTIONS - WALL DIAGONAL CORNER CABINET

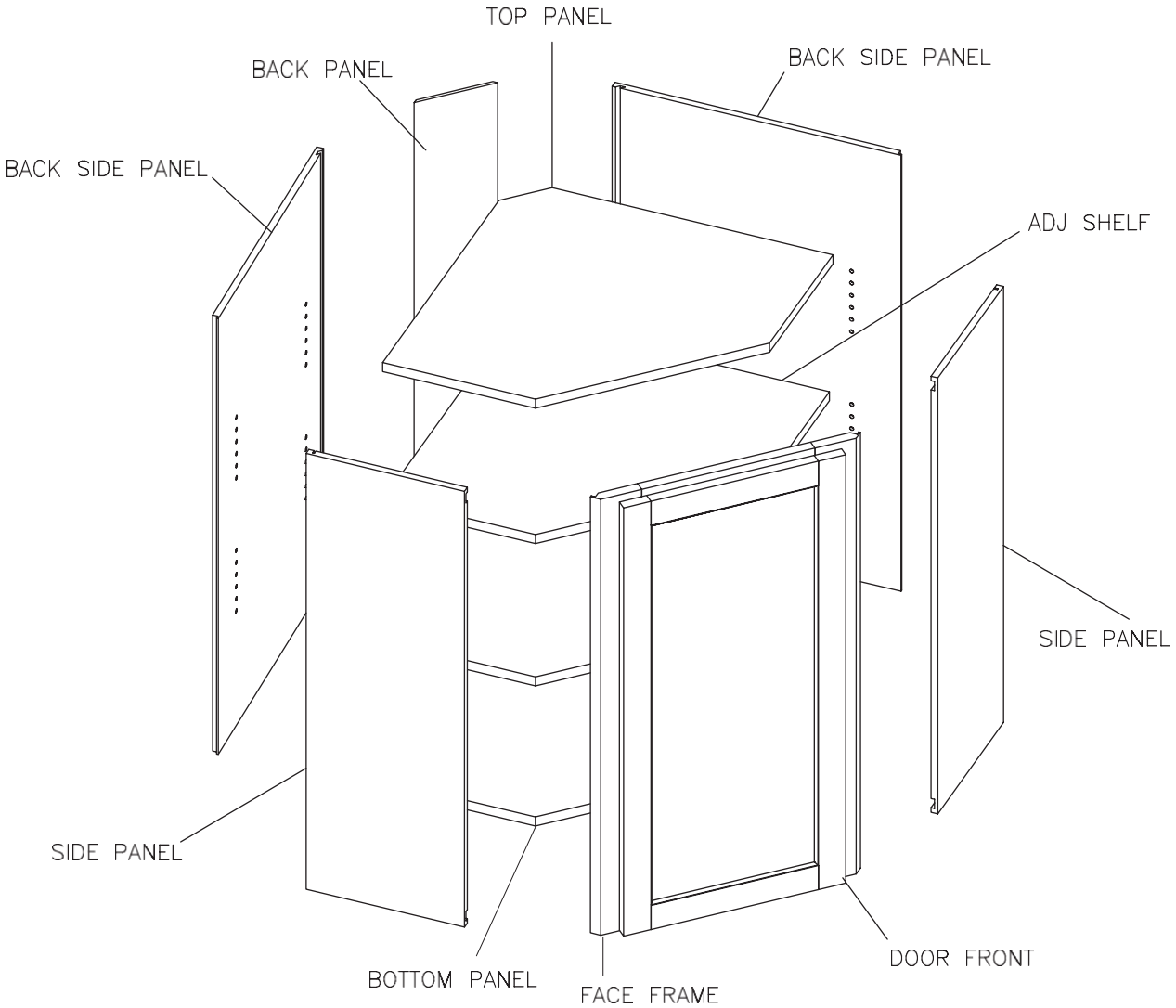

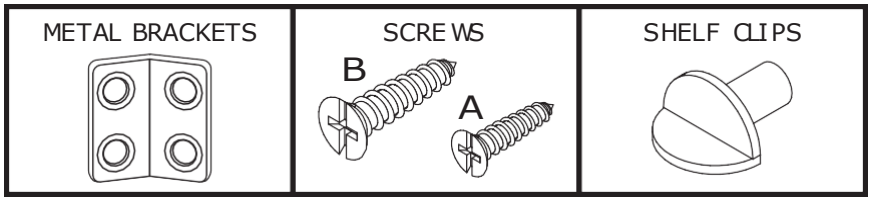

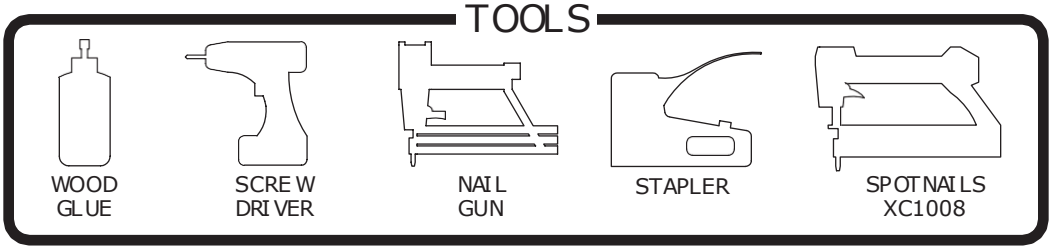

WALL DIAGONAL CORNER CABINET

STEP 1

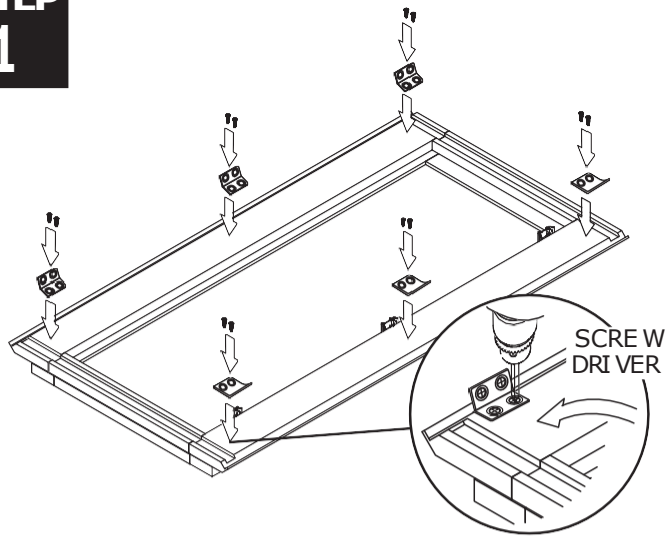

STEP 2

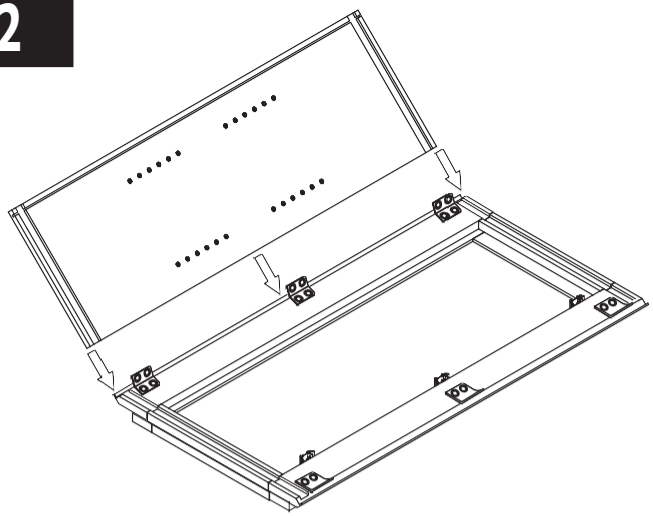

STEP 3

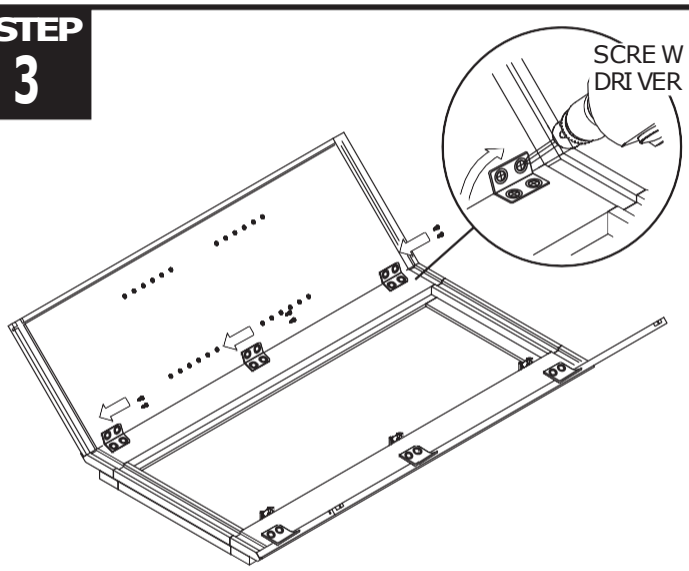

STEP 4

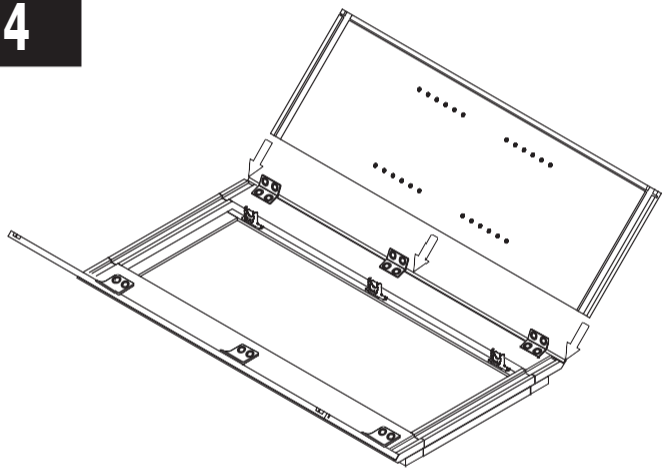

STEP 5

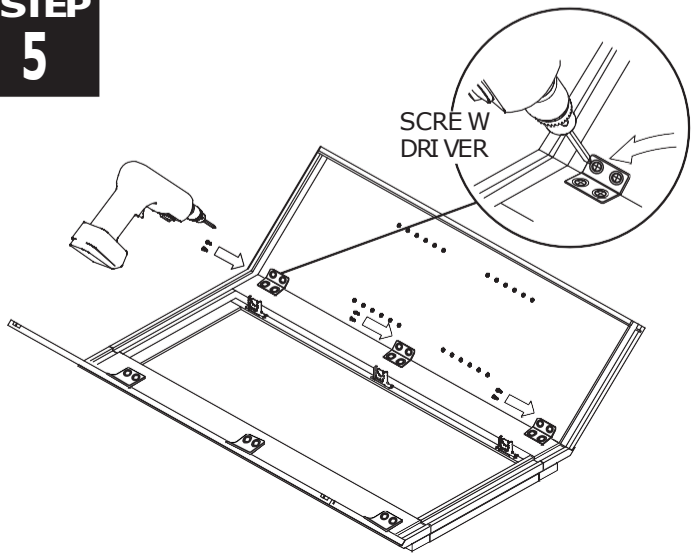

STEP 6

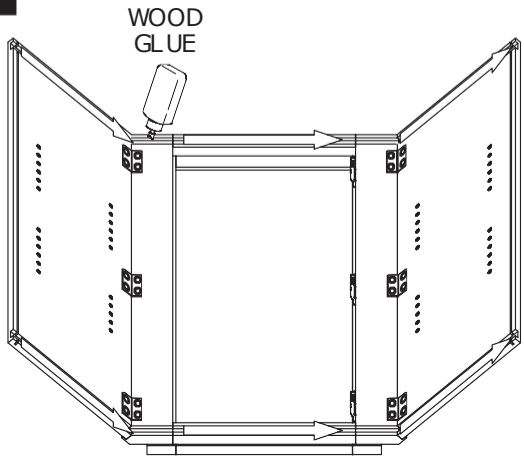

STEP 7

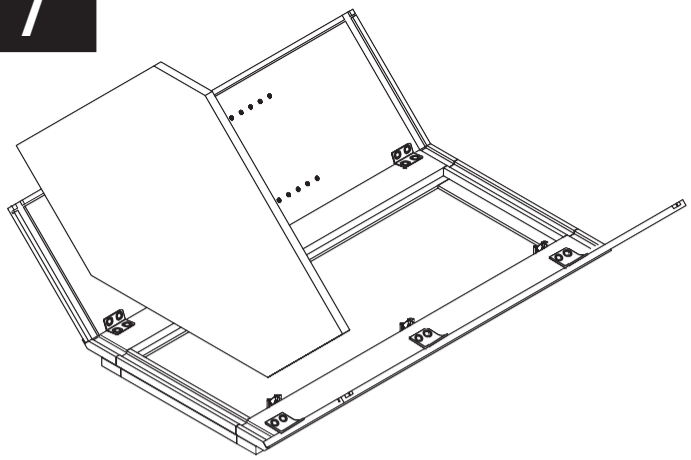

STEP 8

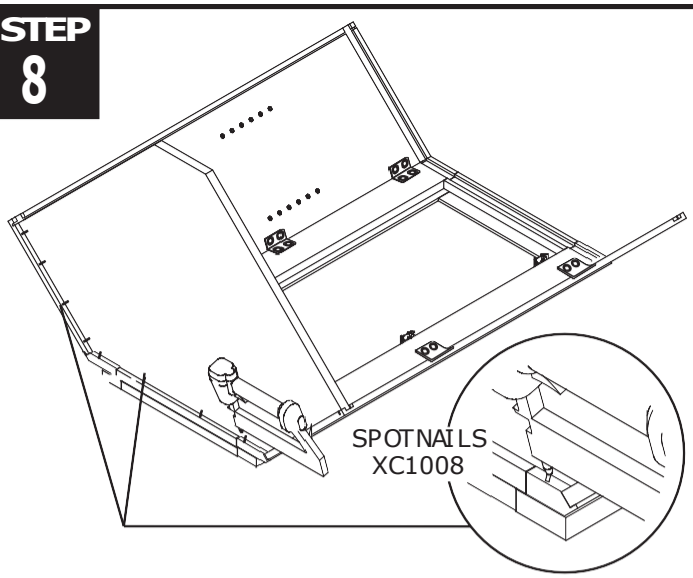

STEP 9

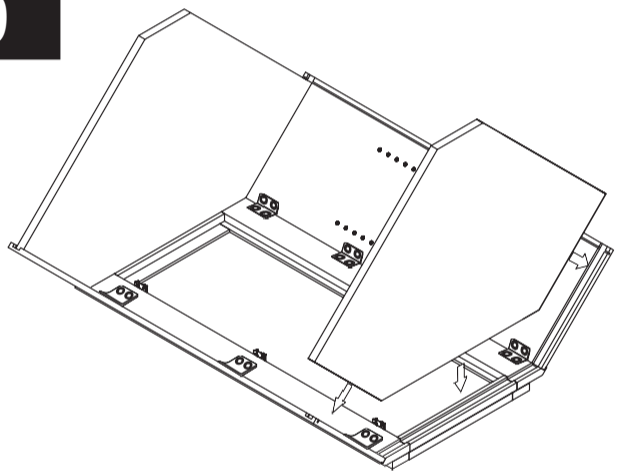

STEP 10

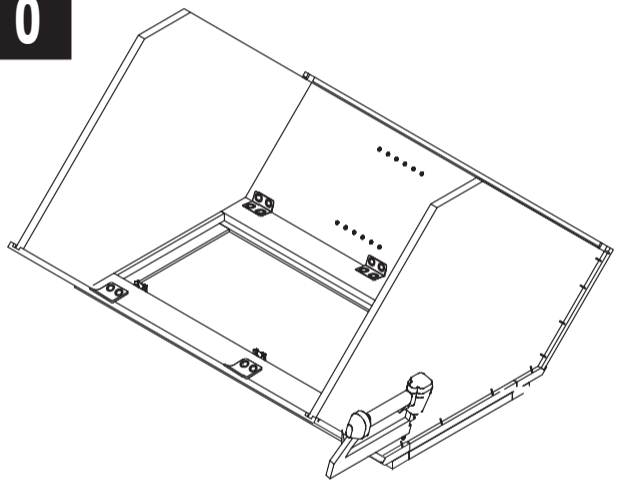

STEP 11

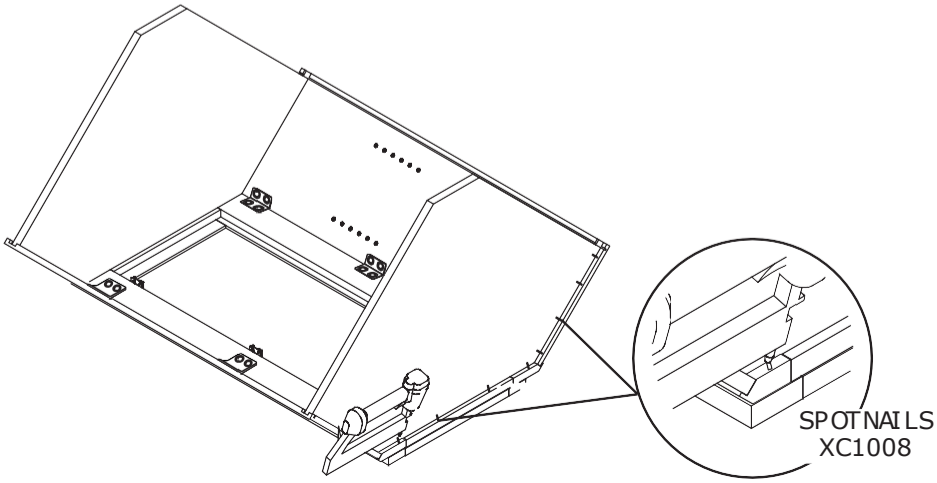

STEP 12

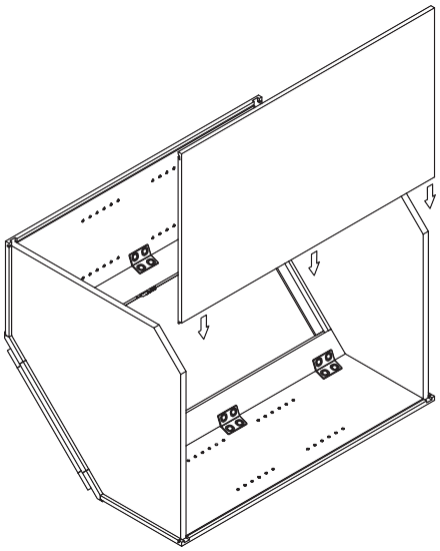

STEP 13

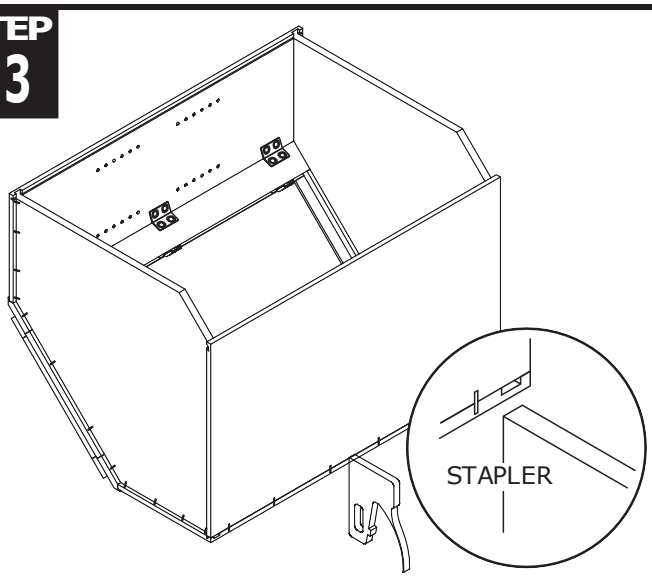

STEP 14

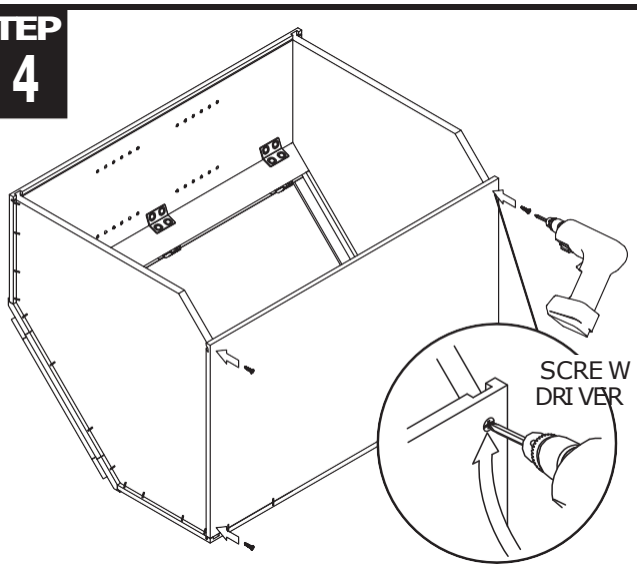

STEP 15

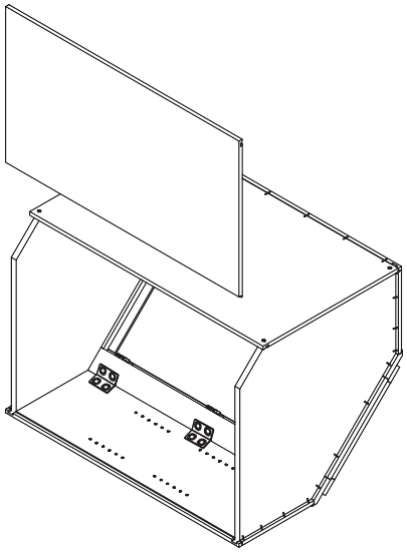

STEP 16

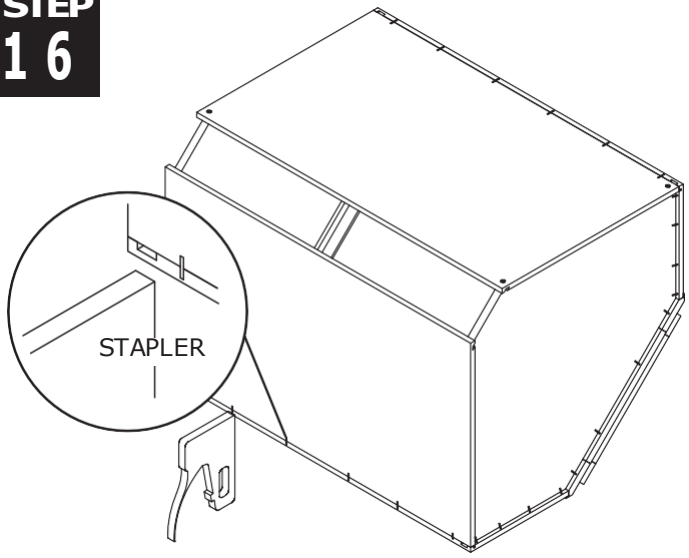

STEP 17

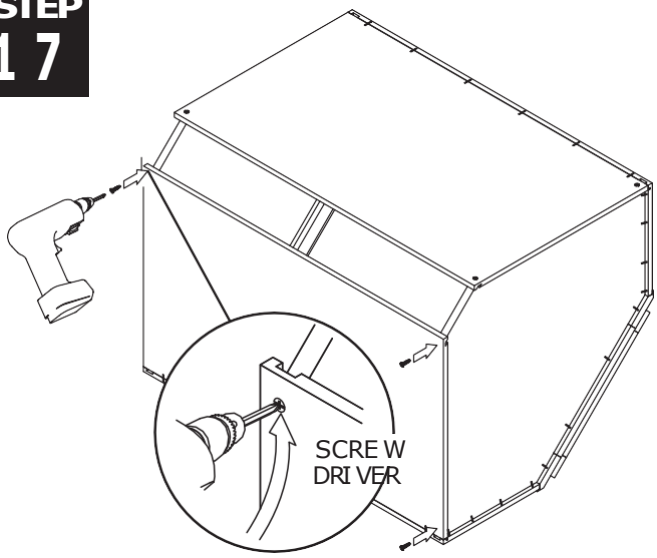

STEP 18

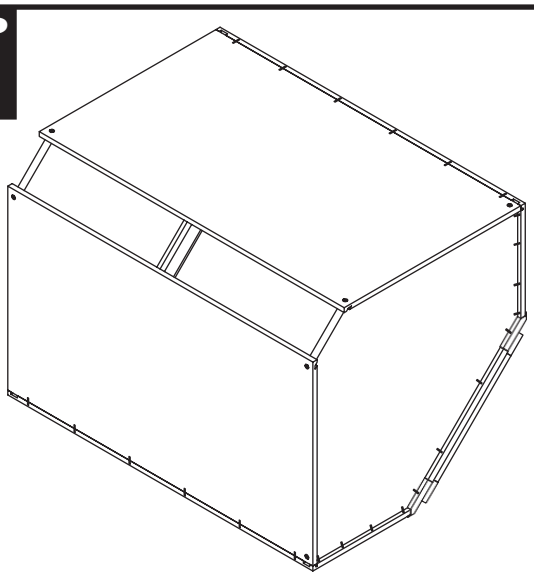

STEP 19

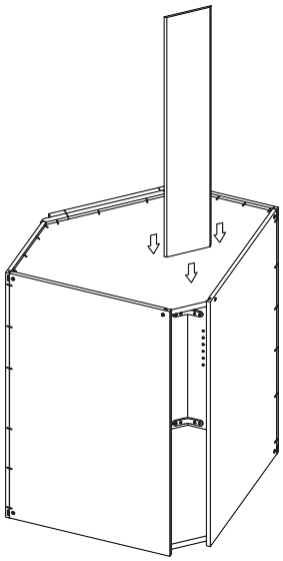

STEP 20

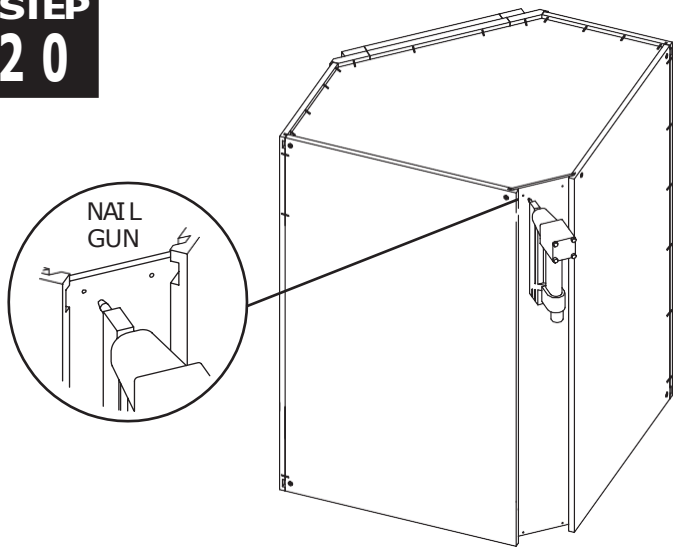

STEP 21

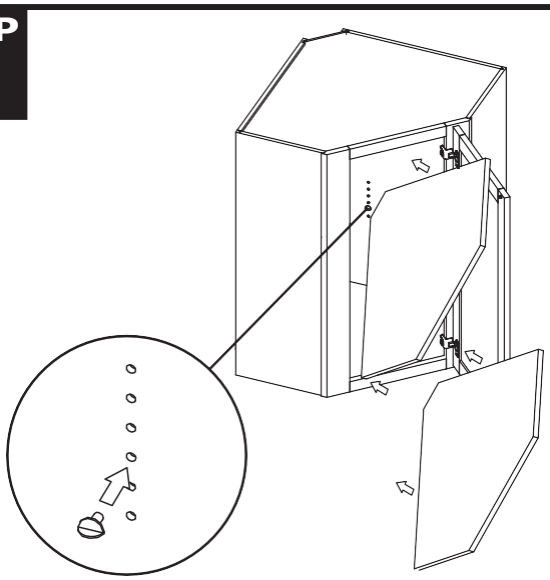

STEP 22

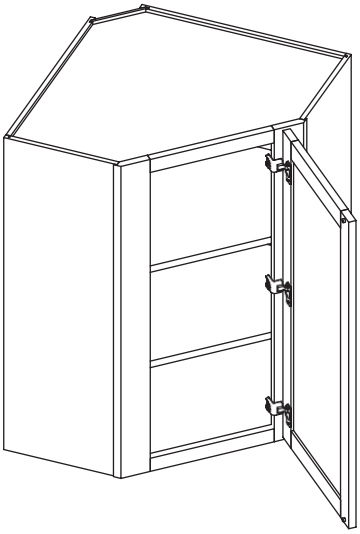

To make out the most convenience way for the installation
Since 2017, We made all our tall cabinets including pantry and oven into stackable structure,
which means they become 2 portions(upper+lower) instead of one whole piece.

ASSEMBLING INSTRUCTIONS - TALL PANTRY

PANTRY

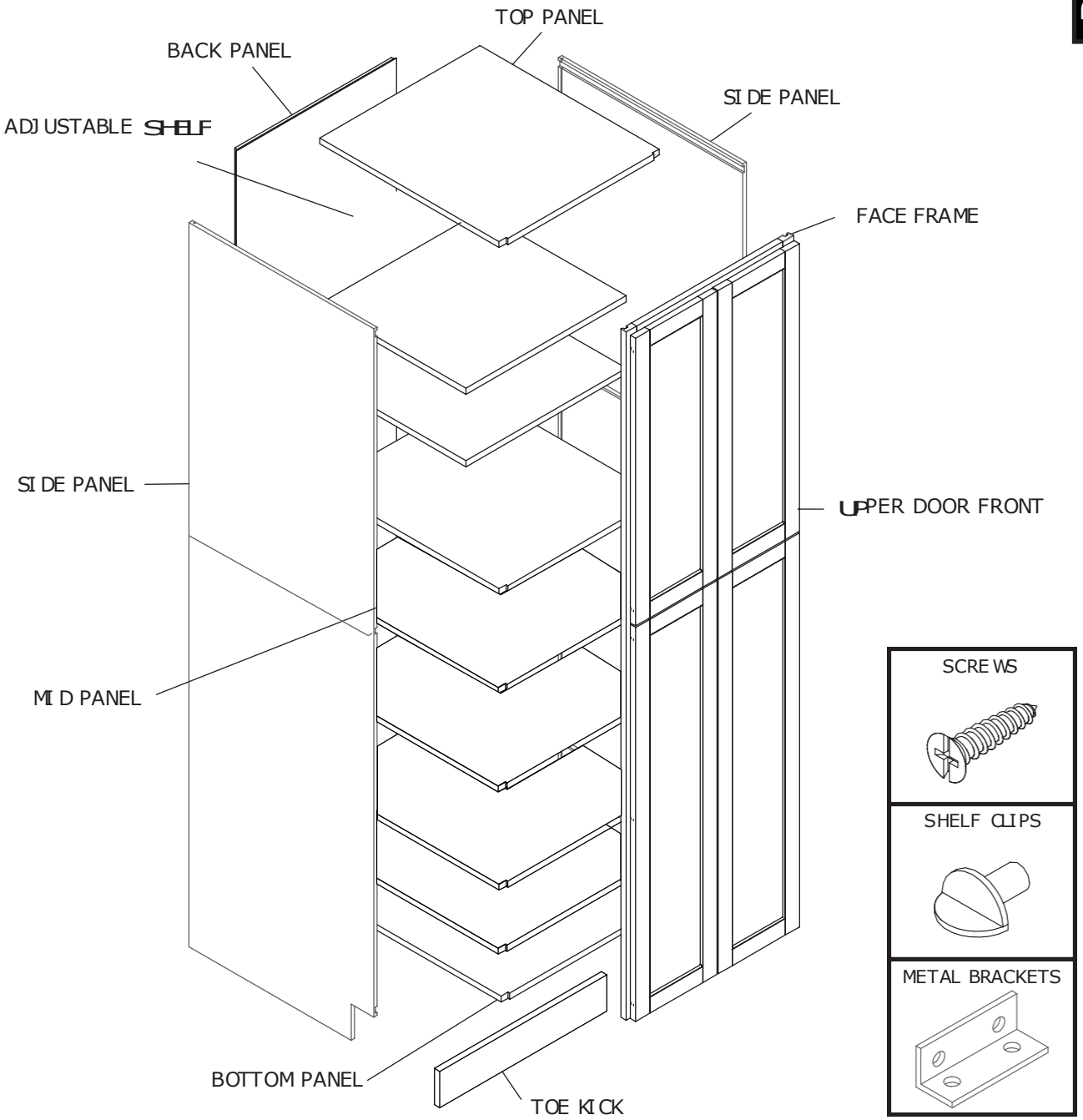

TOOLS

To make out the most convenience way for the installation
Since 2017, We made all our tall cabinets including pantry and oven into stackable structure,
which means they become 2 portions(upper+lower) instead of one whole piece.

PANTRY

STEP 1

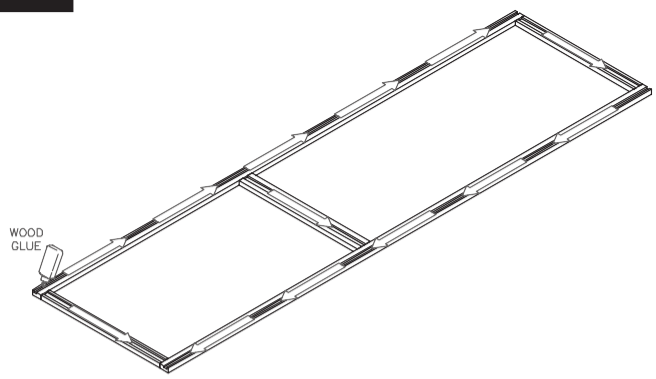

STEP 2

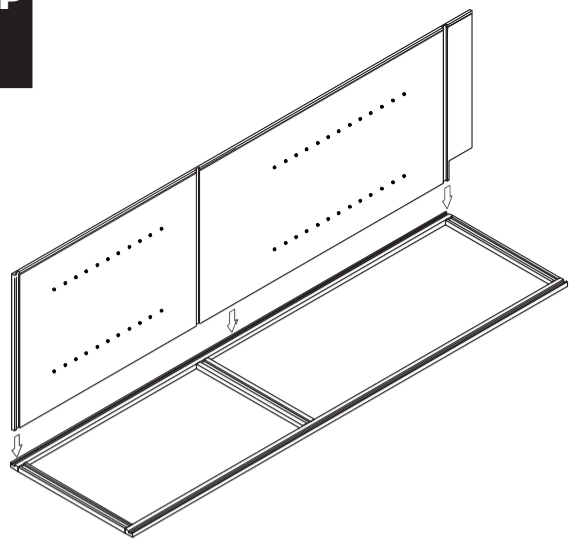

STEP 3

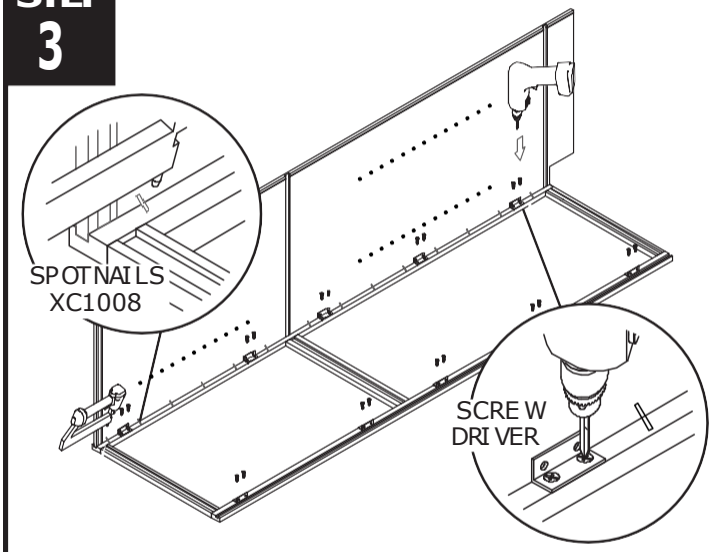

STEP 4

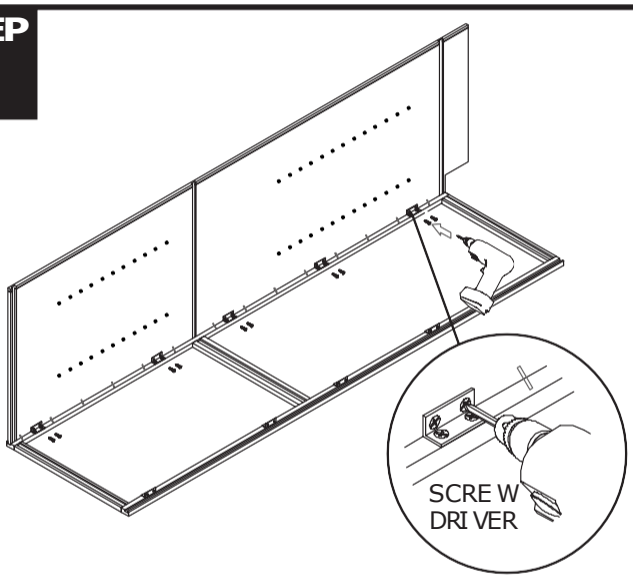

STEP 5

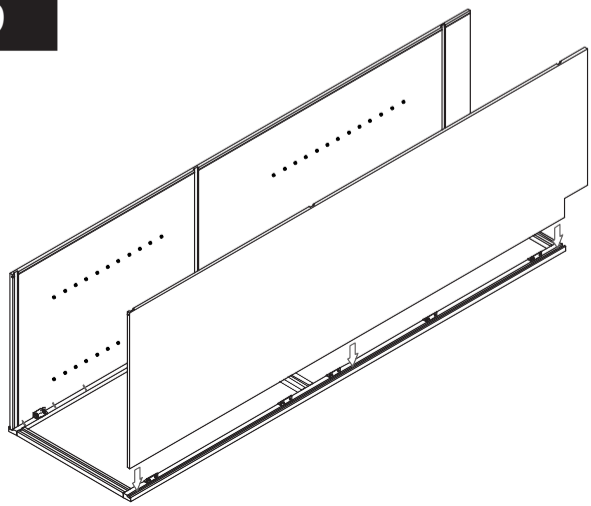

STEP 6

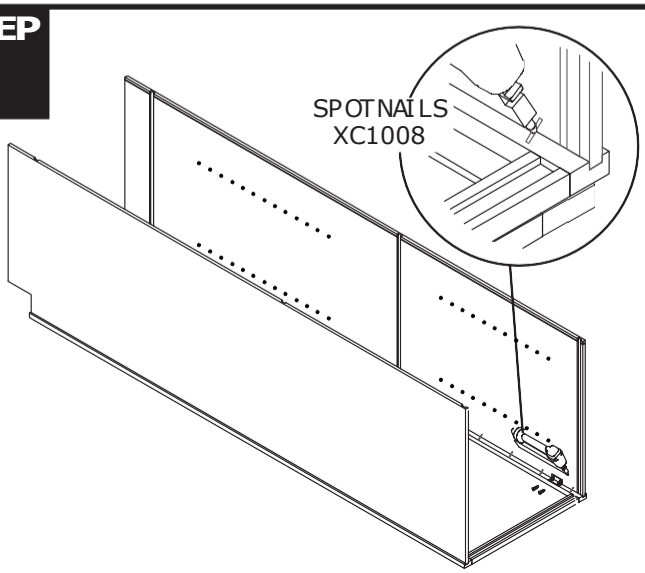

To make out the most convenience way for the installation
Since 2017, We made all our tall cabinets including pantry and oven into stackable structure,
which means they become 2 portions(upper+lower) instead of one whole piece

PANTRY

STEP 7

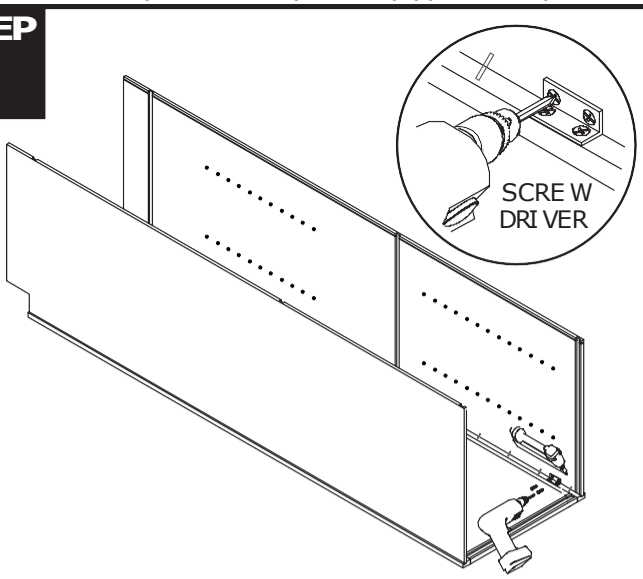

STEP 8

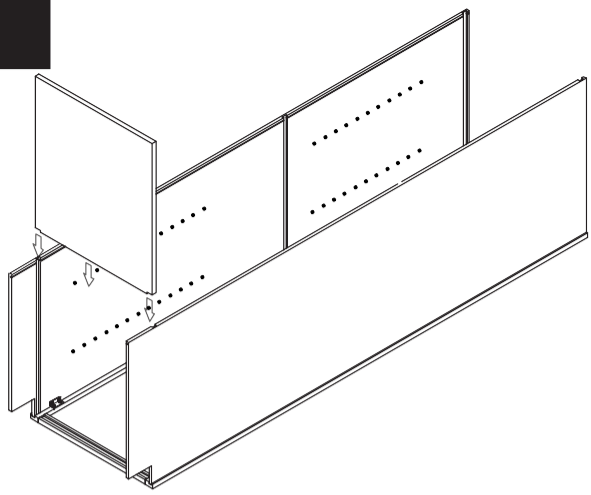

STEP 9

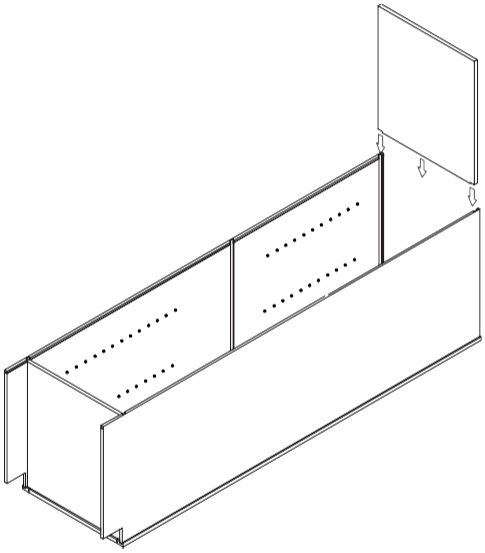

STEP 10

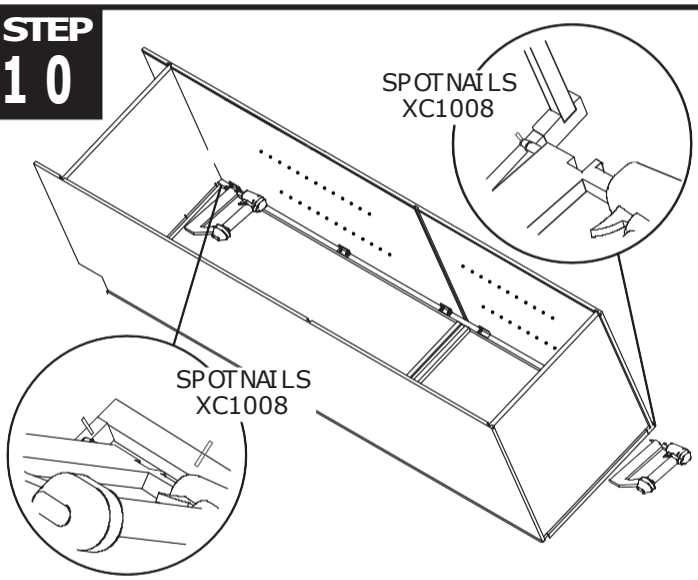

STEP 11

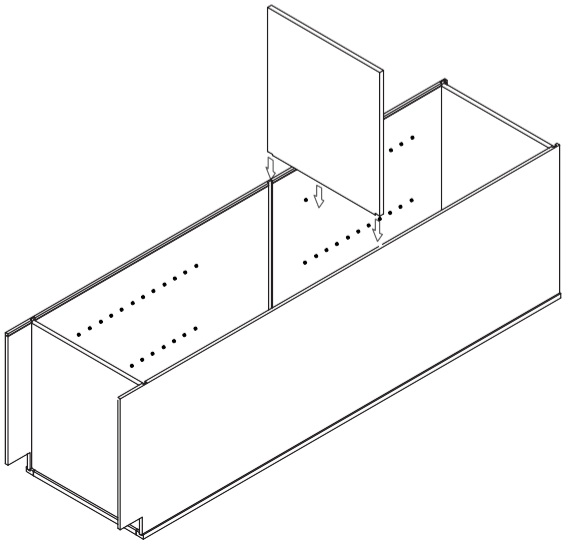

To make out the most convenience way for the installation
Since 2017, We made all our tall cabinets including pantry and oven into stackable structure,
which means they become 2 portions(upper+lower) instead of one whole piece

PANTRY

STEP 12

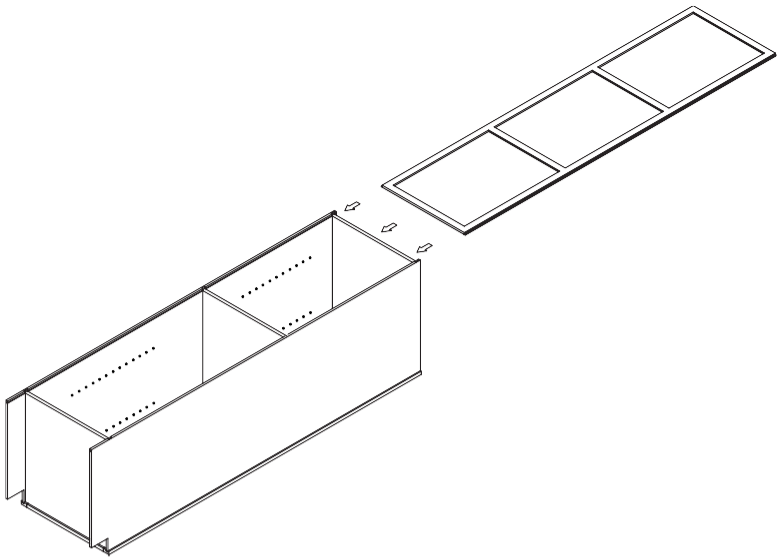

STEP 13

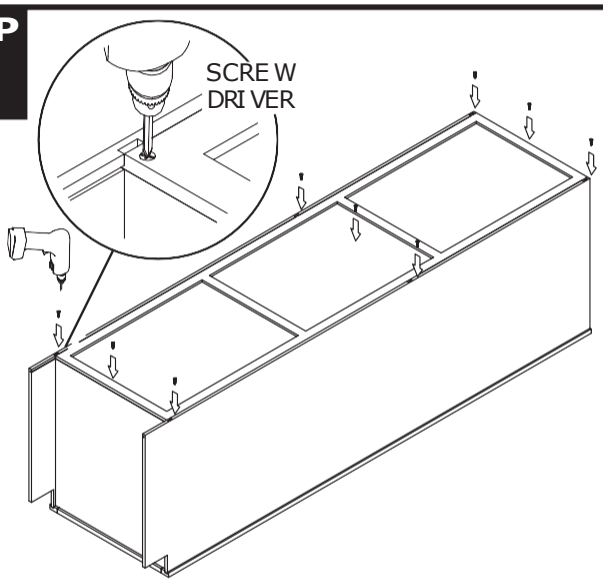

STEP 14

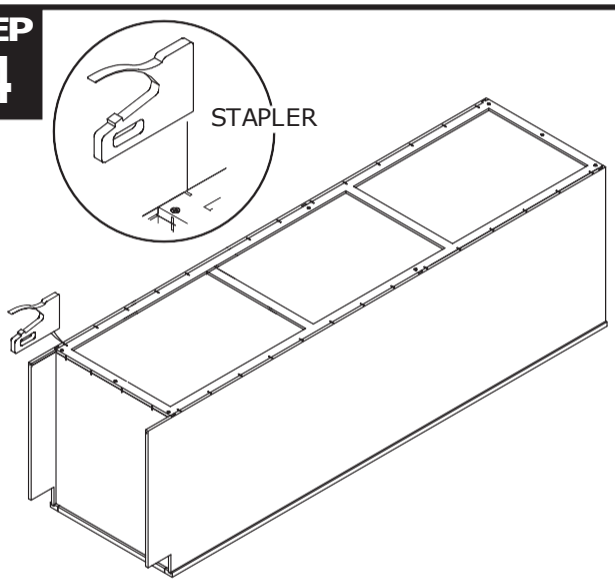

STEP 15

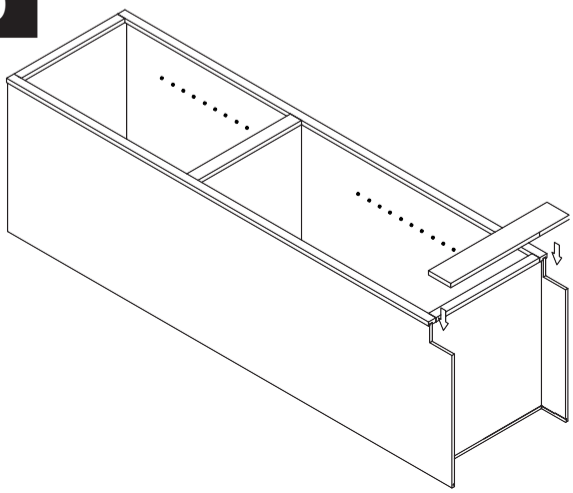

STEP 16

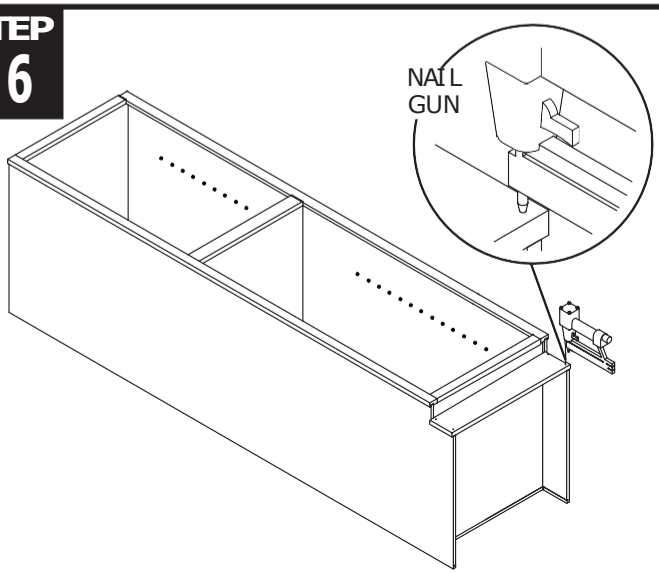

To make out the most convenience way for the installation
Since 2017, We made all our tall cabinets including pantry and oven into stackable structure,
which means they become 2 portions(upper+lower) instead of one whole piece.

PANTRY

STEP 17

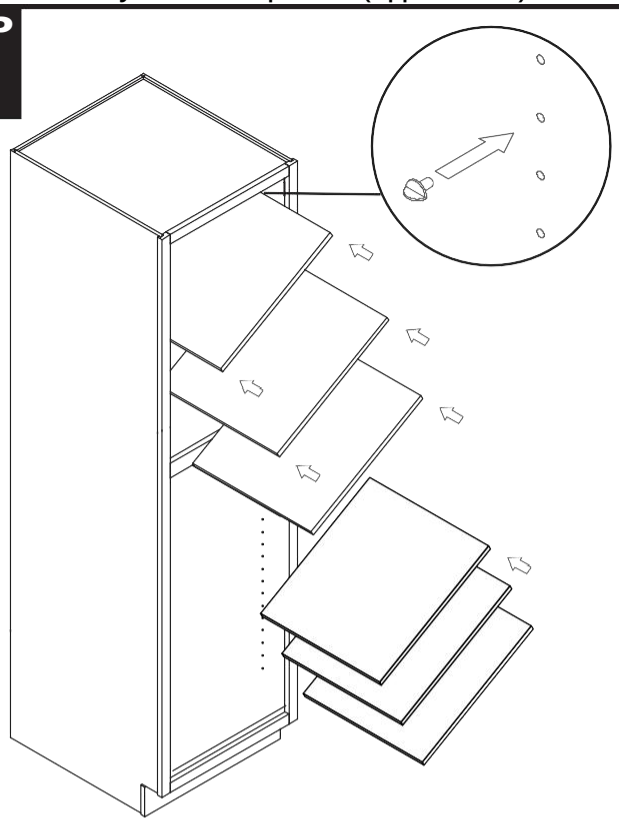

STEP 18

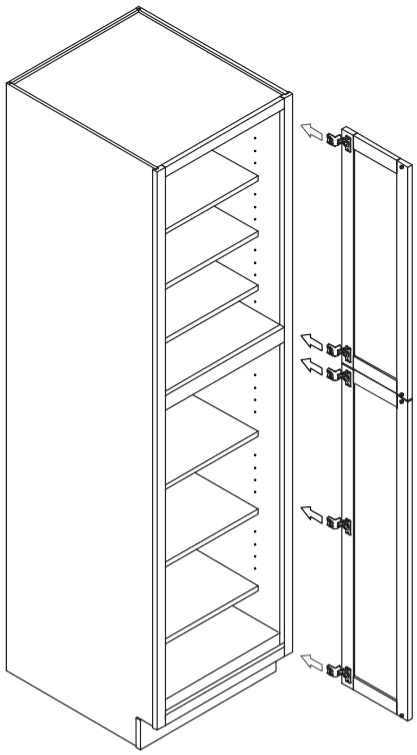

STEP 19

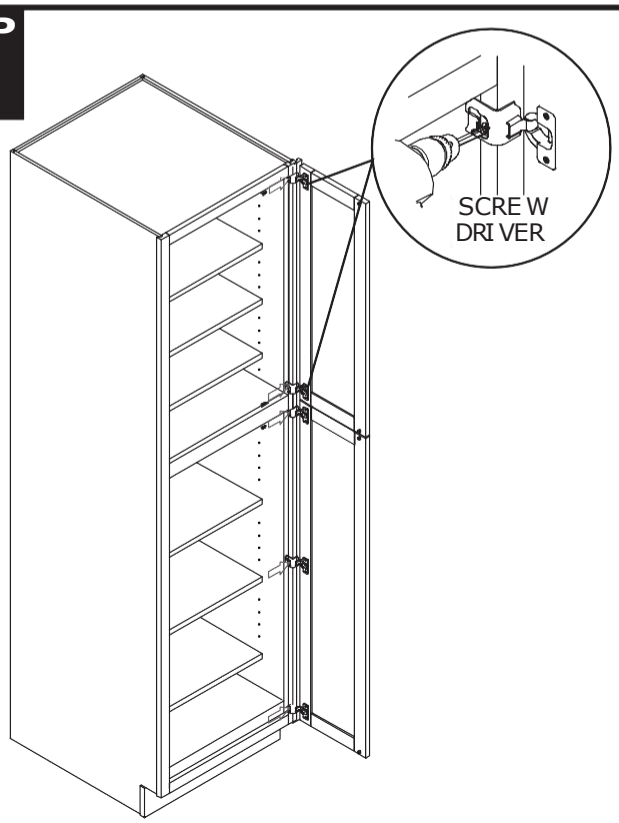

STEP 20

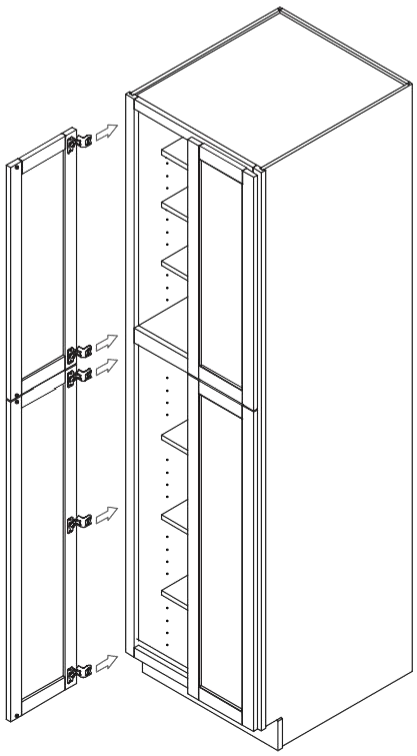

To make out the most convenience way for the installation
Since 2017, We made all our tall cabinets including pantry and oven into stackable structure,
which means they become 2 portions(upper+lower) instead of one whole piece

PANTRY

STEP 21

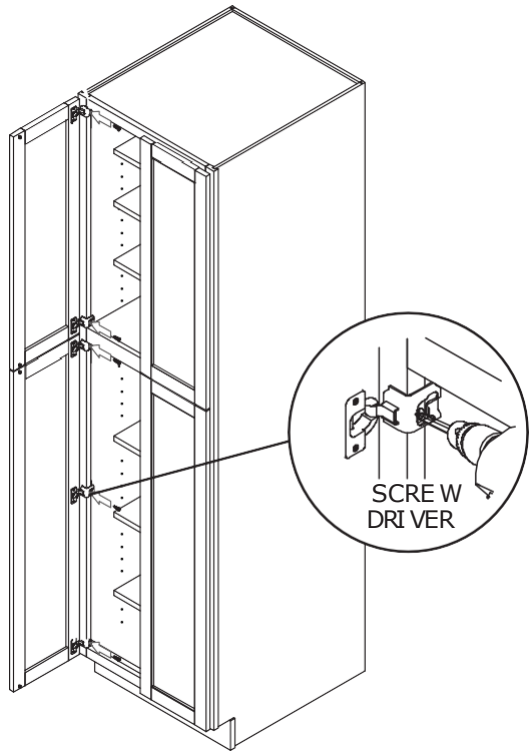

STEP 22

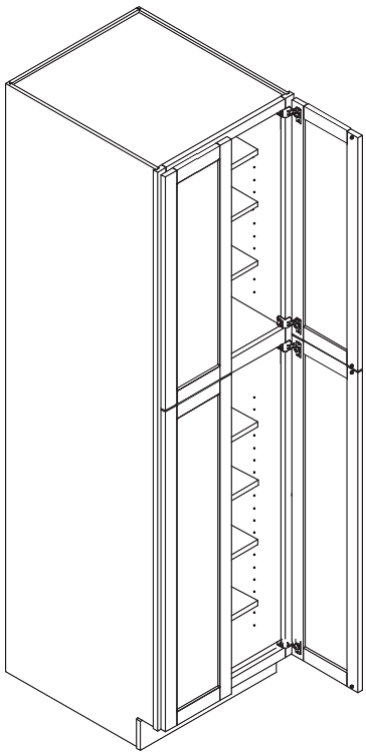

To make out the most convenience way for the installation
Since 2017, We made all our tall cabinets including pantry and oven into stackable structure,
which means they become 2 portions(upper+lower) instead of one whole piece

ASSEMBLING INSTRUCTIONS - OVEN CABINET

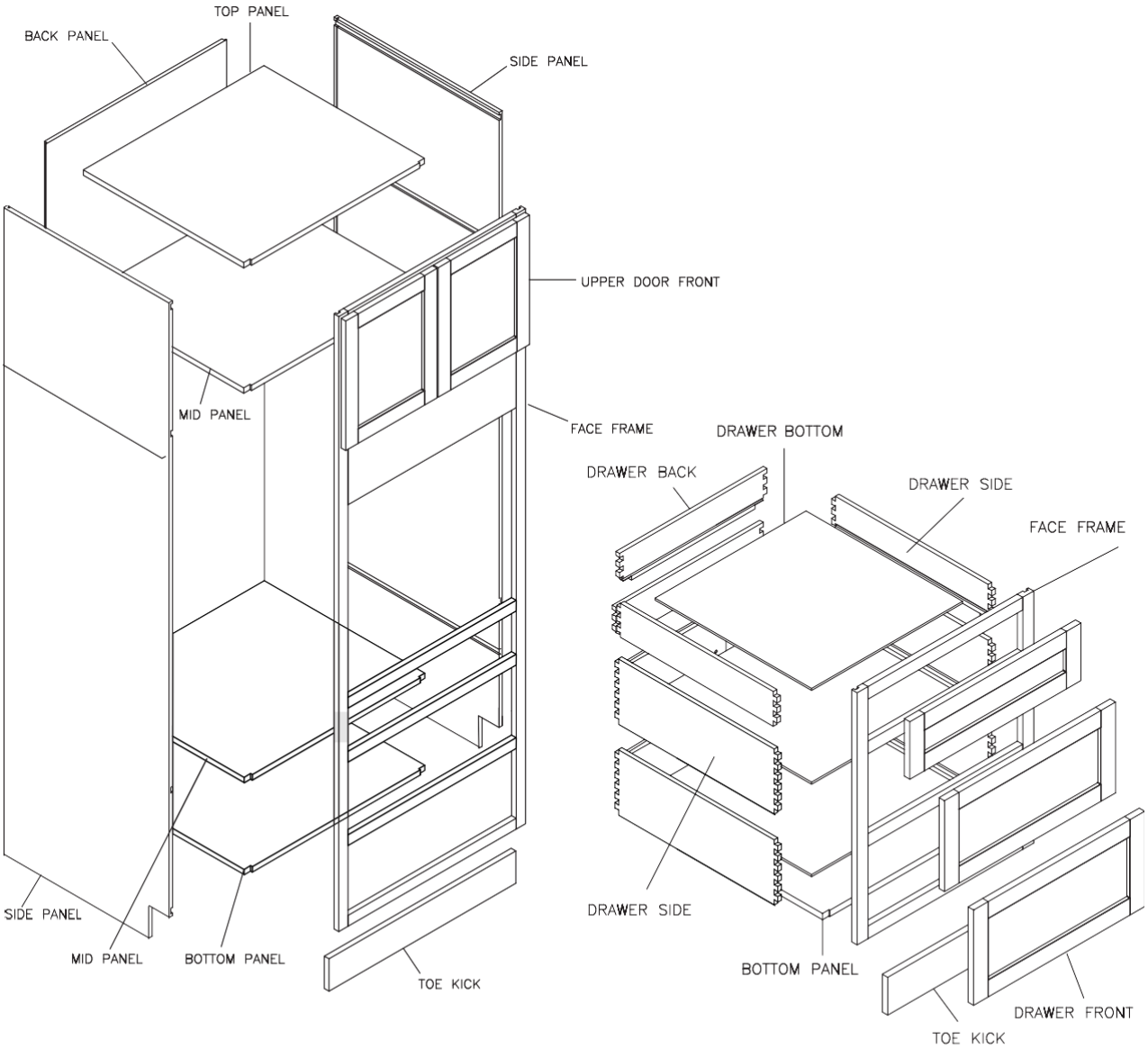

GLIDES	METAL BRACKETS	SCREWS	GLIDE SUPPORTS
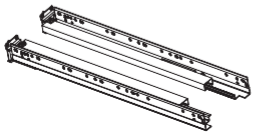	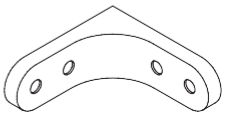	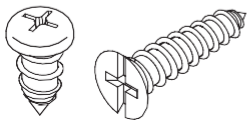	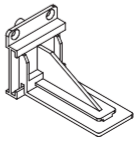

TOOLS

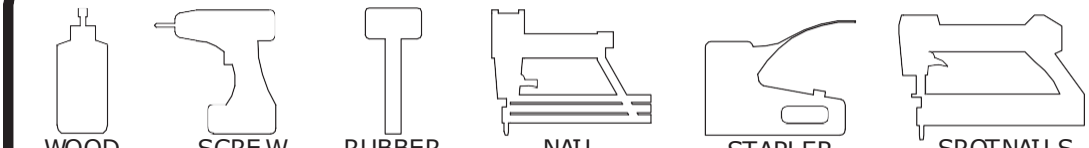

WOOD GLUE | SCREW DRIVER | RUBBER MALLET | NAIL GUN | STAPLER | SPOTNAILS XC1008

To make out the most convenience way for the installation
Since 2017, We made all our tall cabinets including pantry and oven into stackable structure,
which means they become 2 portions(upper+lower) instead of one whole piece

OVEN CABINET

STEP 1

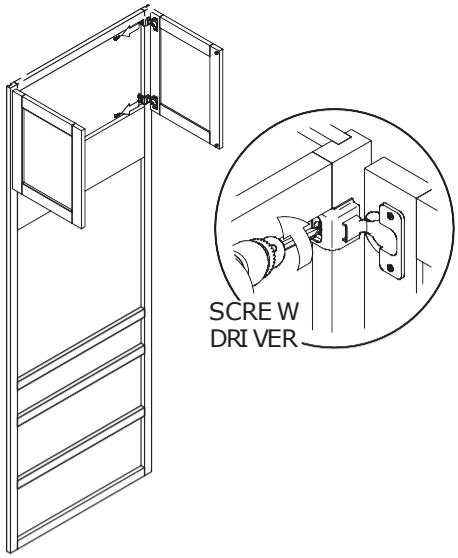

STEP 2

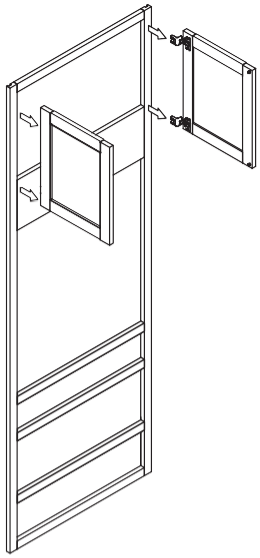

STEP 3

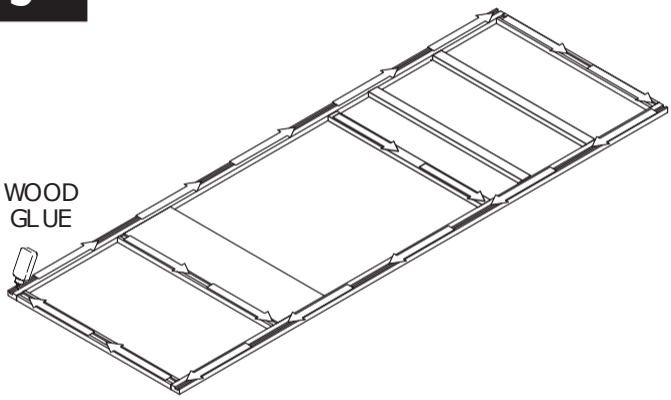

STEP 4

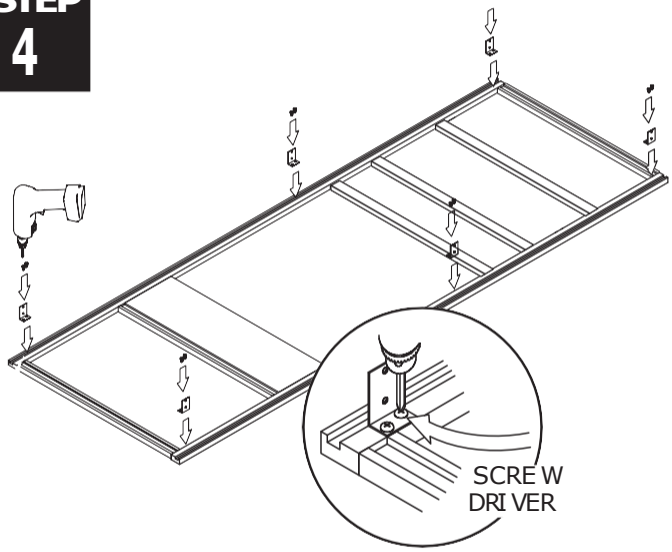

STEP 5

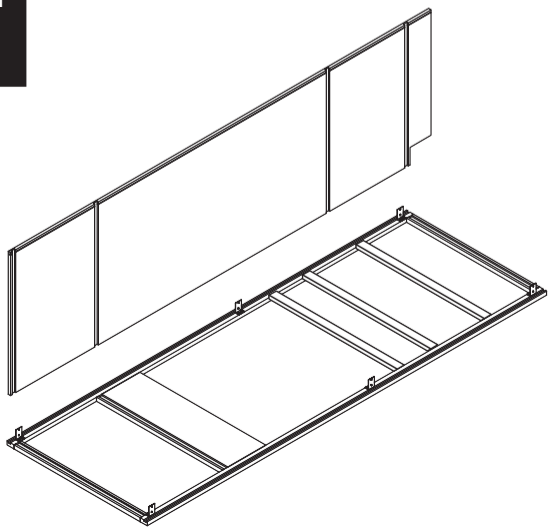

STEP 6

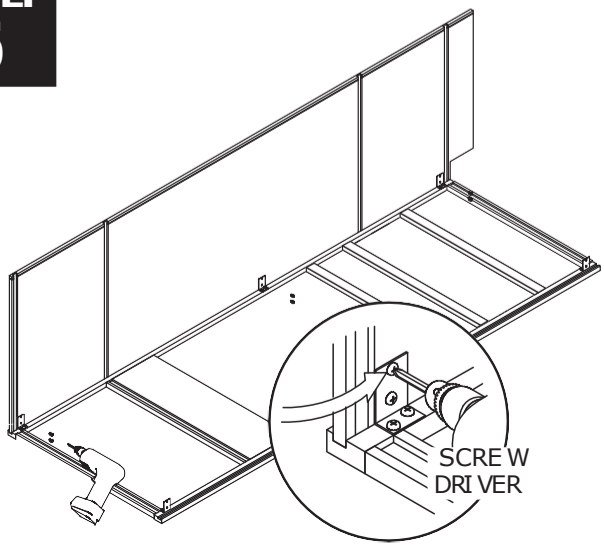

To make out the most convenience way for the installation
Since 2017, We made all our tall cabinets including pantry and oven into stackable structure,
which means they become 2 portions(upper+lower) instead of one whole piece.

OVEN CABINET

STEP 7

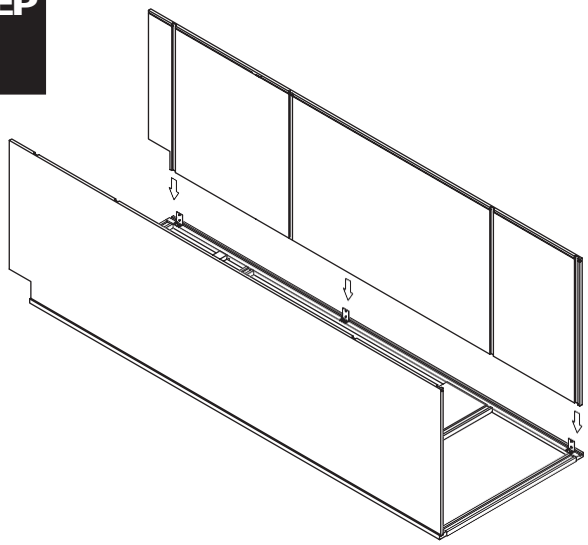

STEP 8

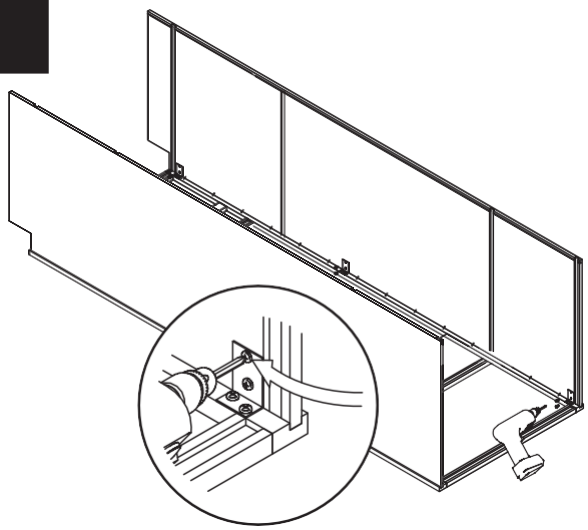

STEP 9

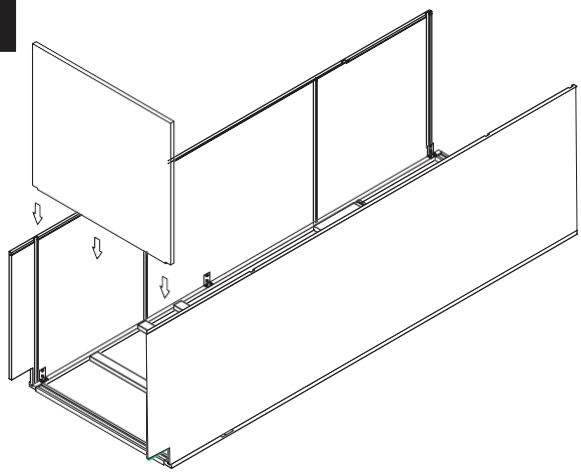

STEP 10

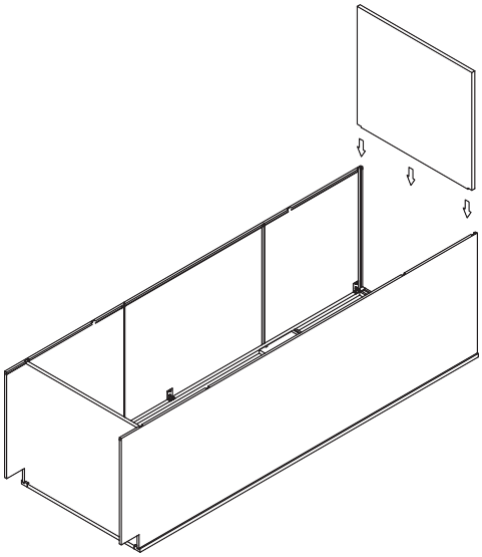

STEP 11

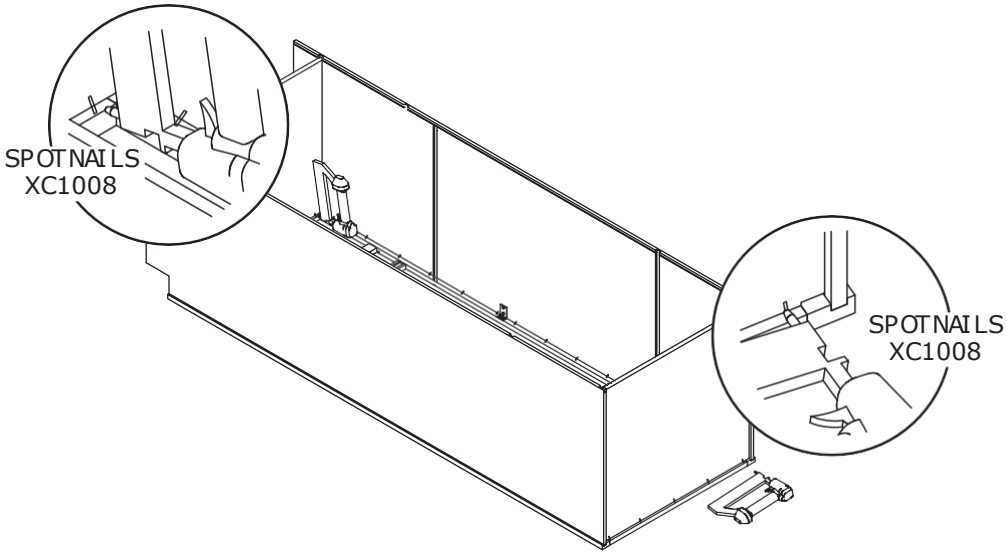

To make out the most convenience way for the installation
Since 2017, We made all our tall cabinets including pantry and oven into stackable structure,
which means they become 2 portions(upper+lower) instead of one whole piece.

OVEN CABINET

STEP 12

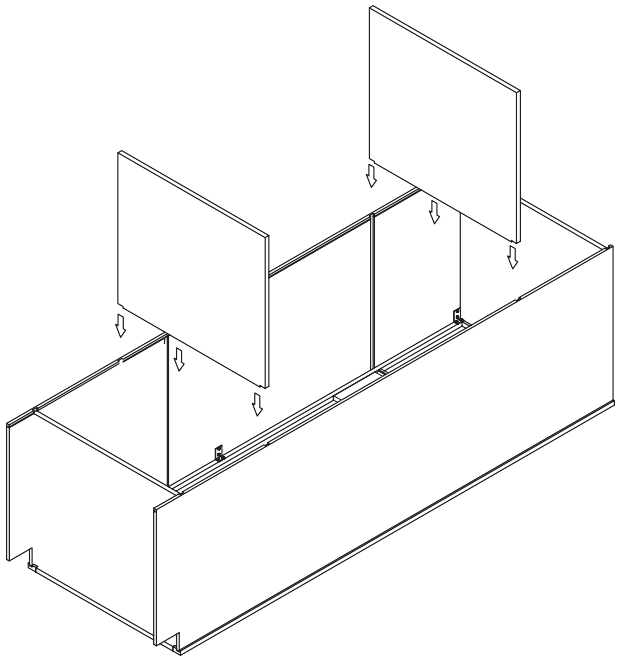

STEP 13

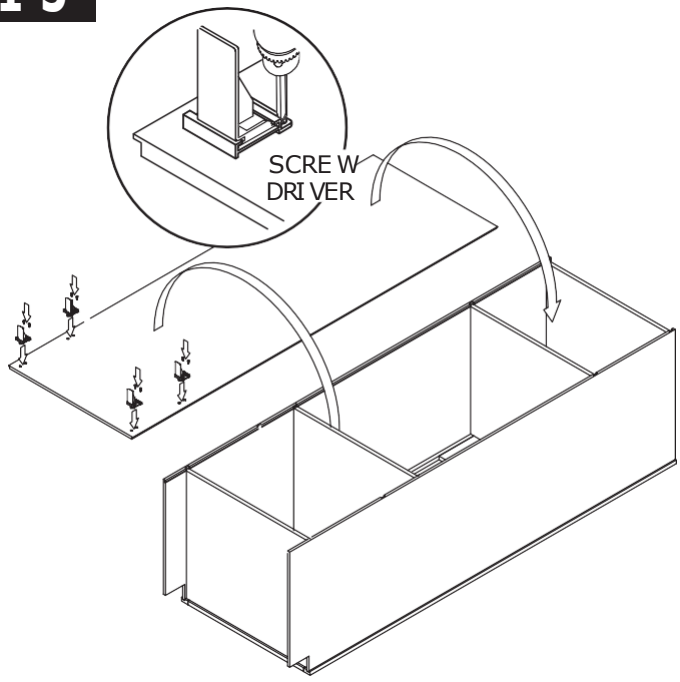

STEP 14

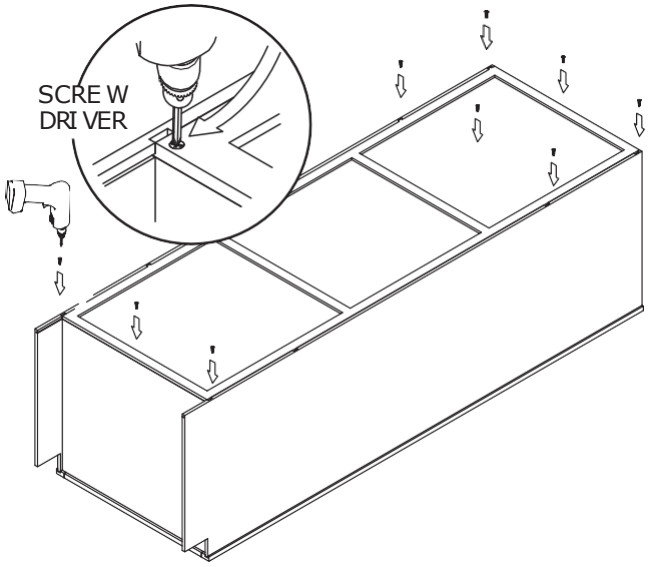

STEP 15

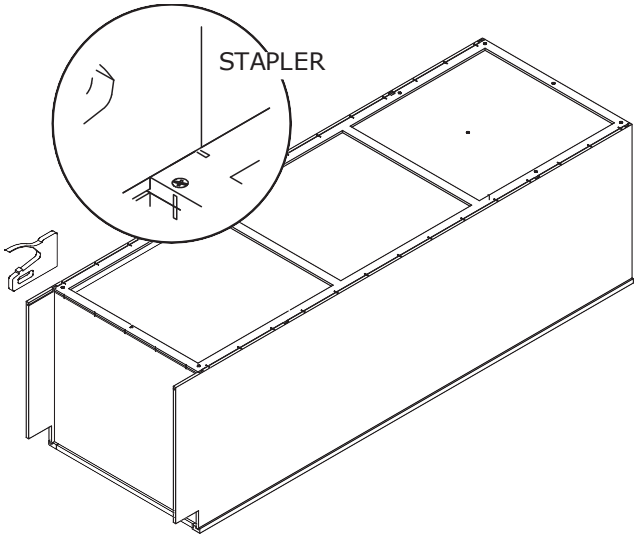

To make out the most convenience way for the installation
Since 2017, We made all our tall cabinets including pantry and oven into stackable structure,
which means they become 2 portions(upper+lower) instead of one whole piece.

OVEN CABINET

STEP 16

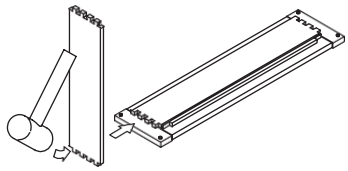

STEP 17

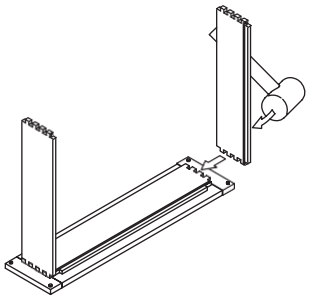

STEP 18

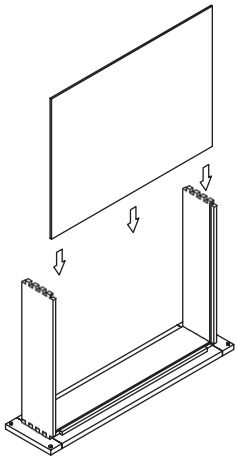

STEP 19

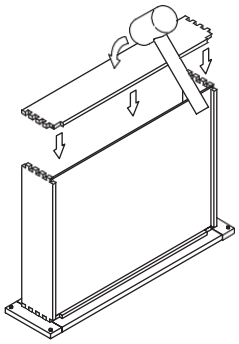

STEP 20

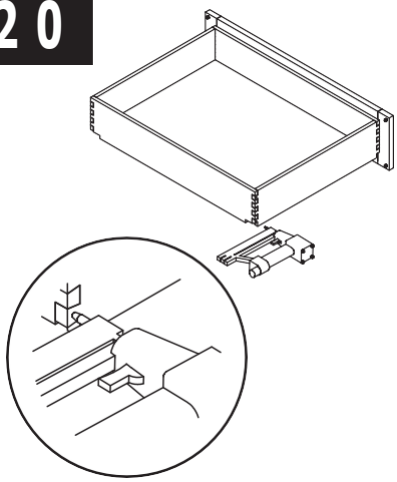

STEP 21

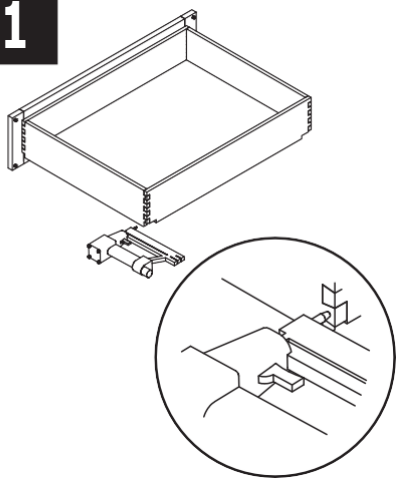

STEP 22

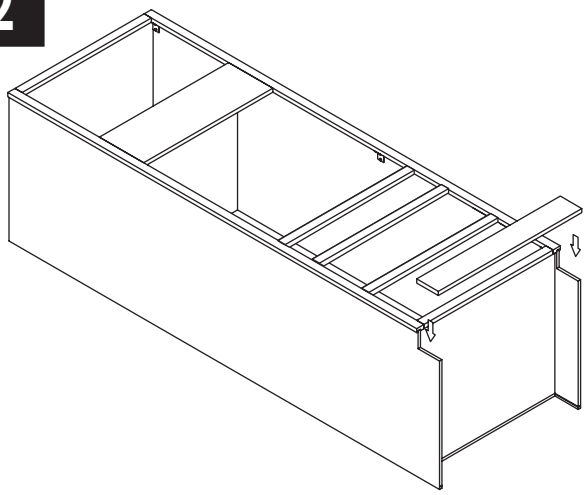

STEP 23

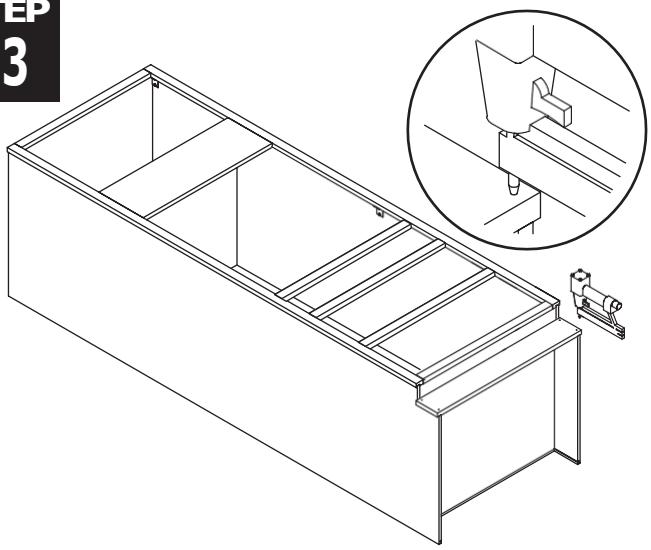

To make out the most convenience way for the installation
Since 2017, We made all our tall cabinets including pantry and oven into stackable structure,
which means they become 2 portions(upper+lower) instead of one whole piece.

OVEN CABINET

STEP 24

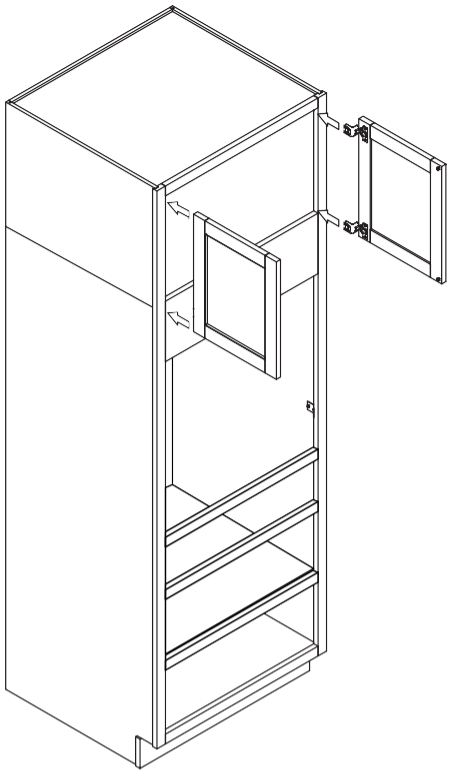

STEP 25

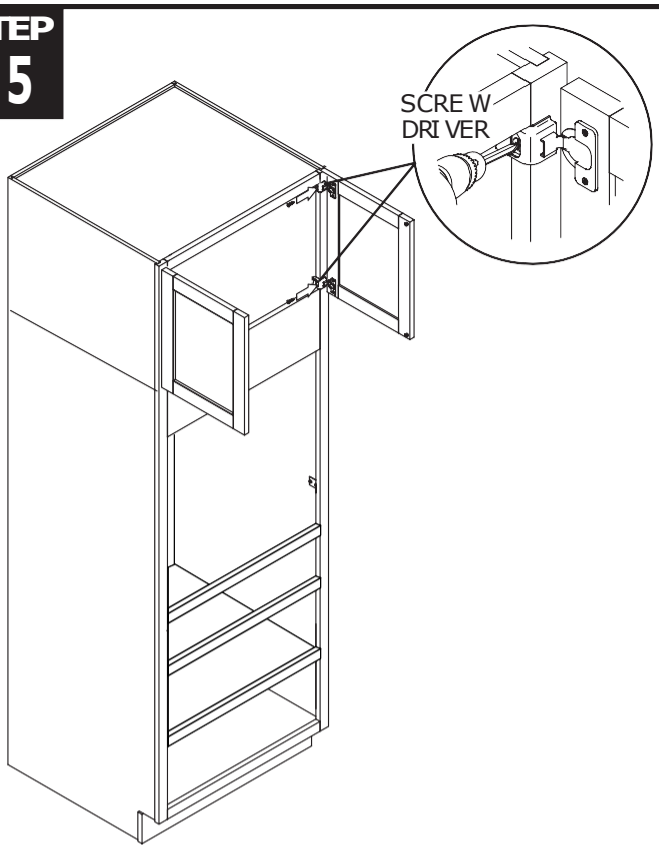

STEP 26

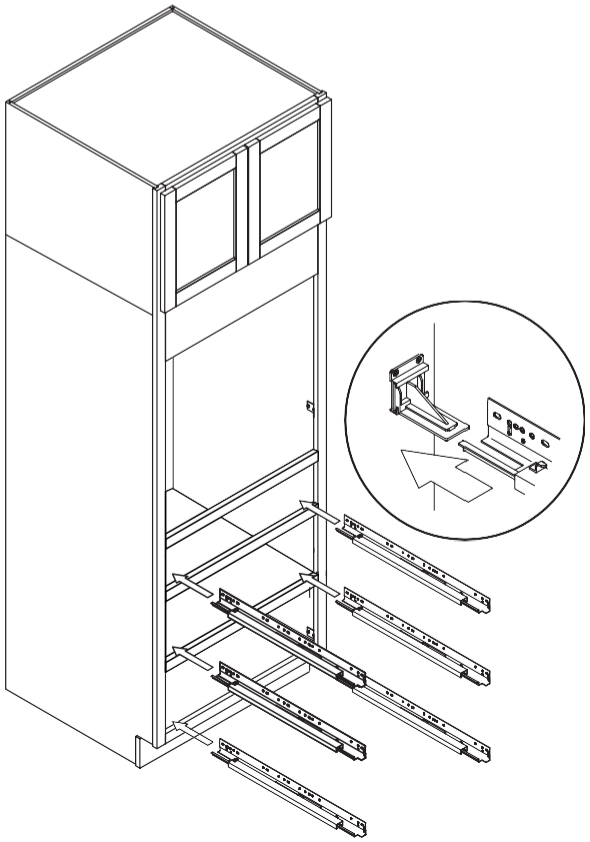

STEP 27

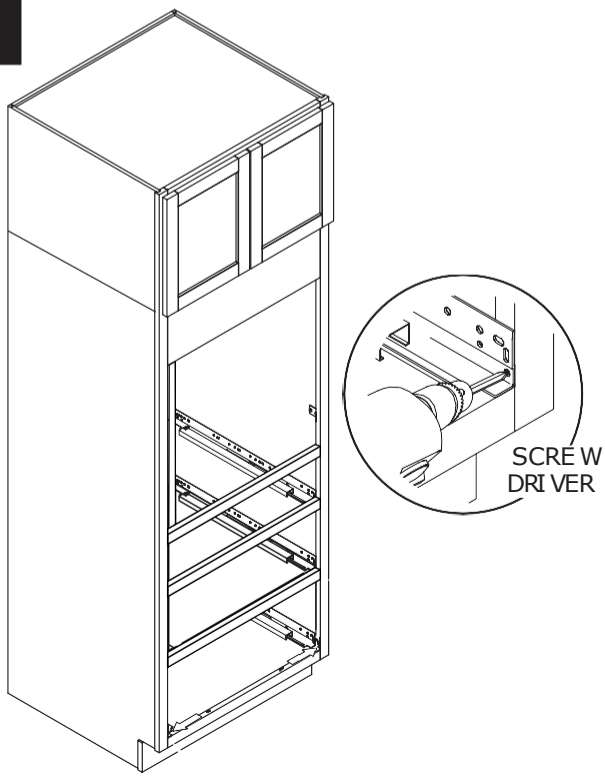

To make out the most convenience way for the installation
Since 2017, We made all our tall cabinets including pantry and oven into stackable structure,
which means they become 2 portions(upper+lower) instead of one whole piece.

OVEN CABINET

STEP 28

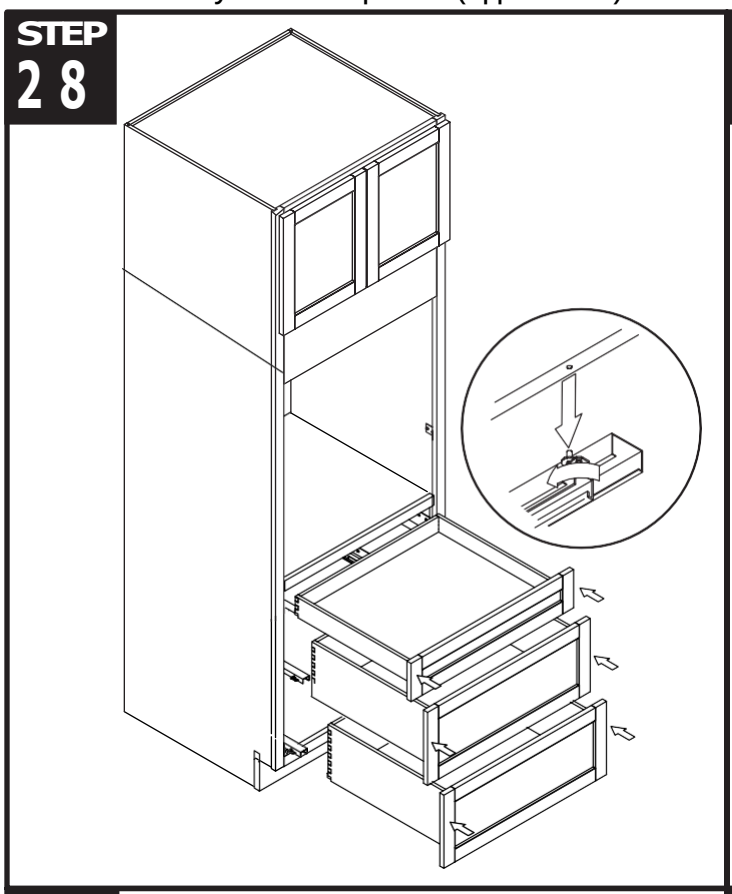

STEP 29

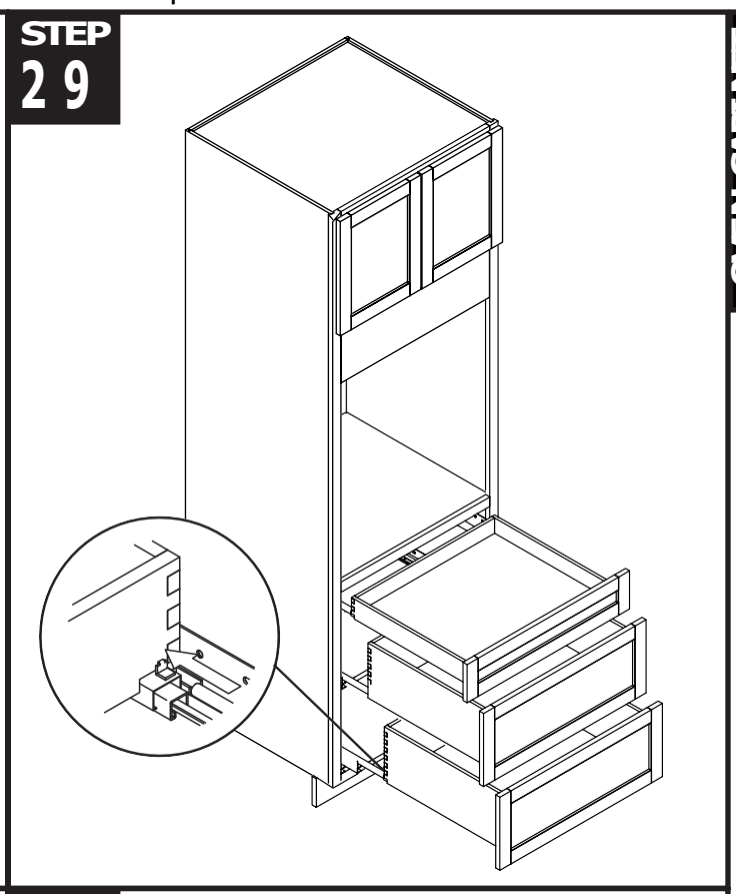

STEP 30

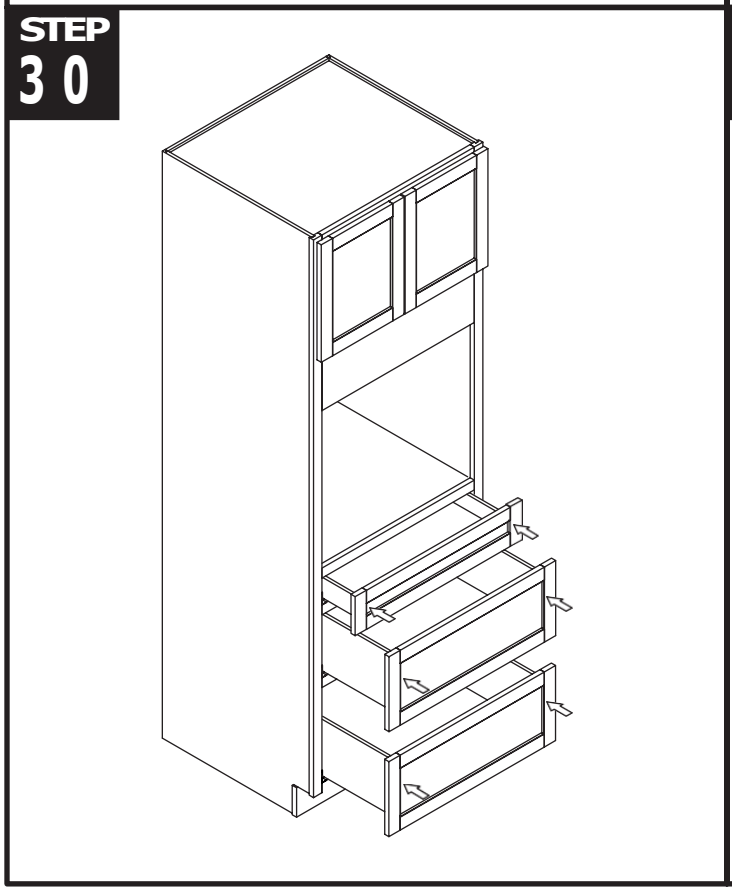

STEP 31

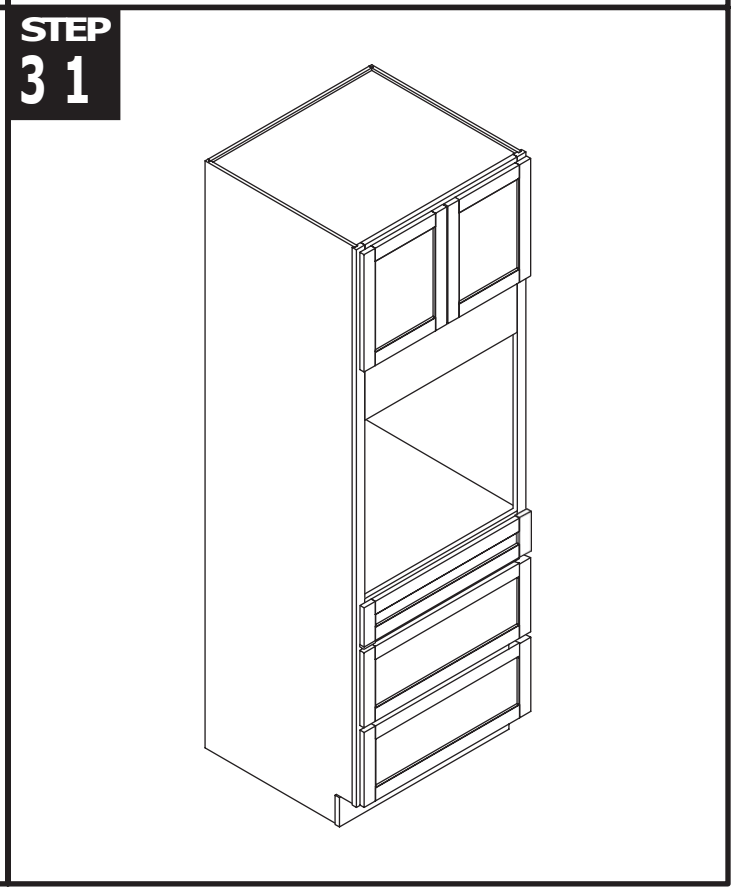

ASSEMBLING INSTRUCTIONS - VANITY CABINET

MID BEAM
SIDE PANEL
BACK PANEL
FACE FRAME
DRAWER FRONT (FAKE)
DRAWER BACK
DRAWER SIDE
SIDE PANEL
BOTTOM PANEL
TOE KICK
DOOR FRONT
DRAWER BOTTOM
DRAWER FRONT

GLIDES	METAL BRACKETS	SCREWS	GLIDE SUPPORTS
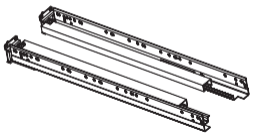	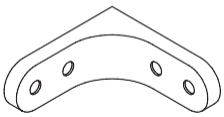	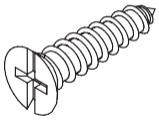	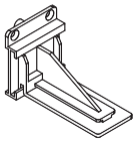

TOOLS

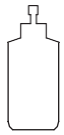
WOOD GLUE

SCREW DRIVER

RUBBER MALLET

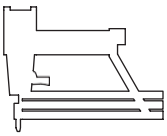
NAIL GUN

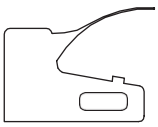
STAPLER

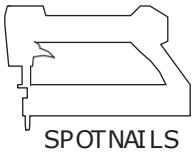
SPOTNAILS XC1008

STEP 1

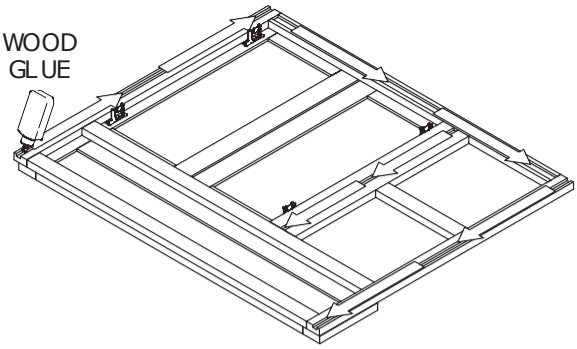

STEP 2

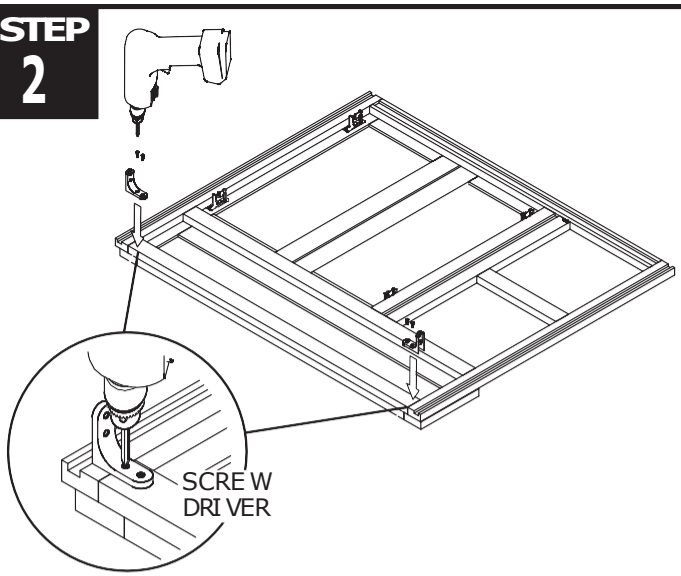

STEP 3

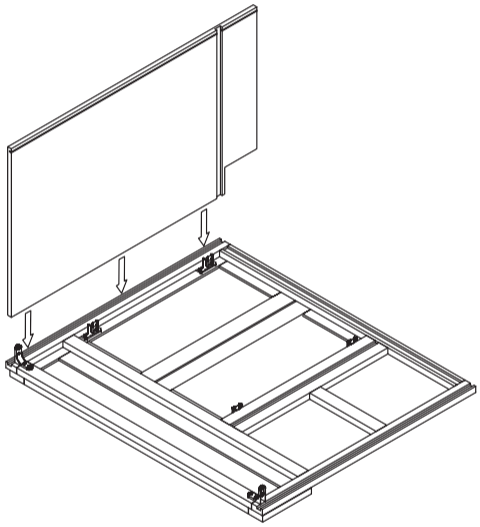

STEP 4

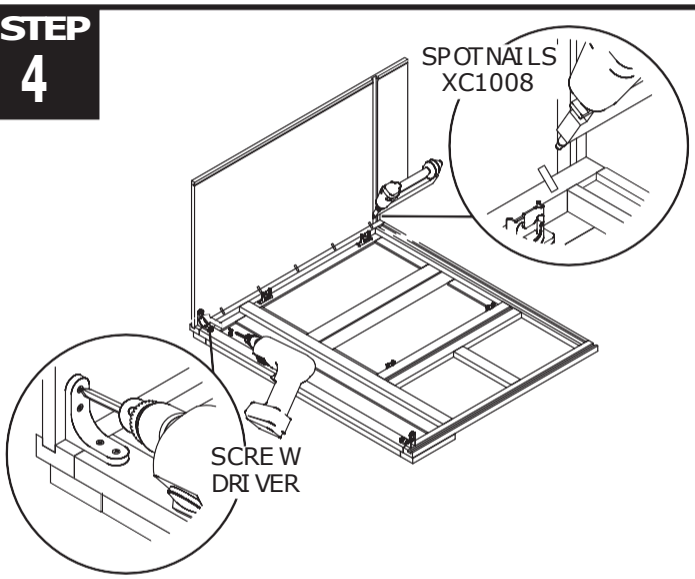

STEP 5

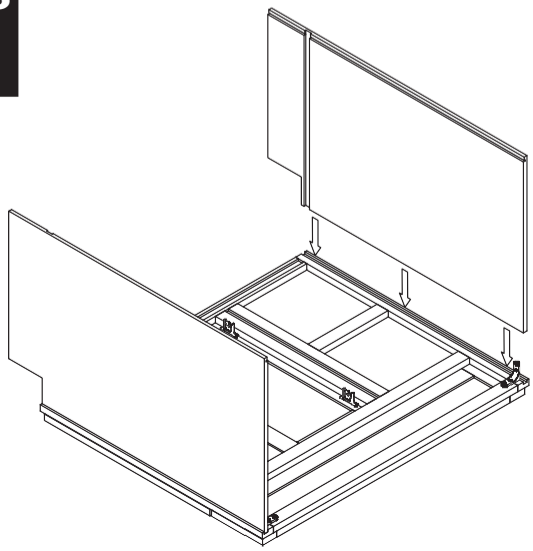

STEP 6

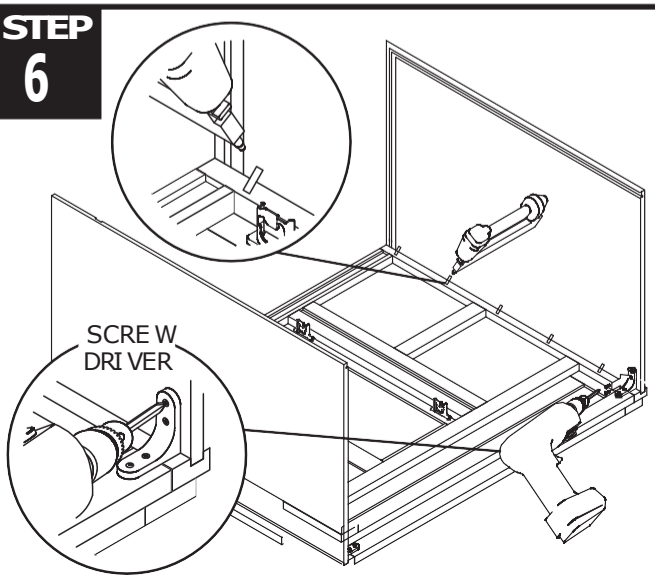

STEP 7

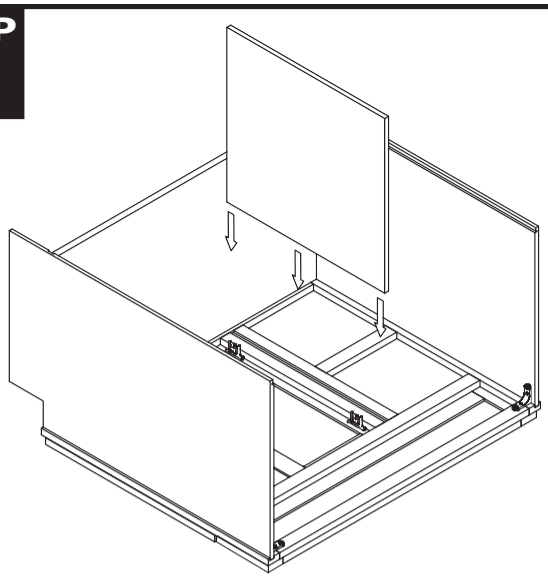

STEP 8

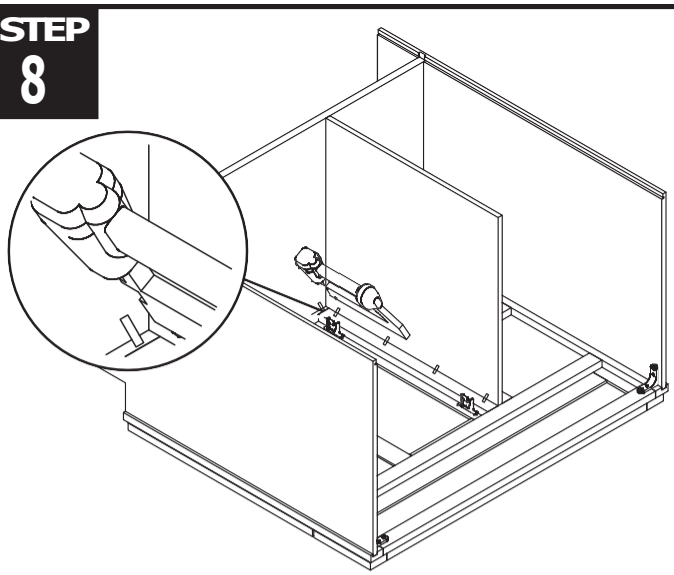

STEP 9

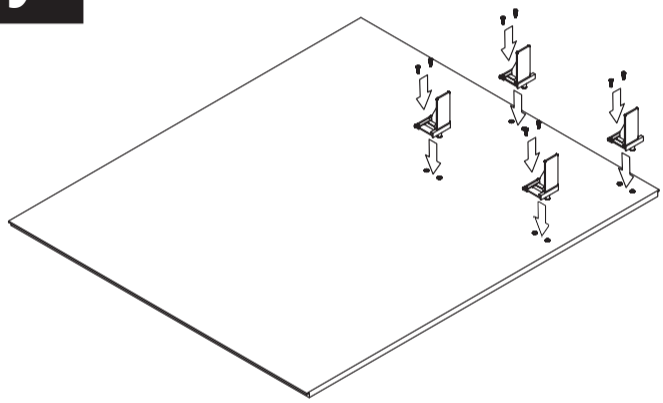

STEP 10

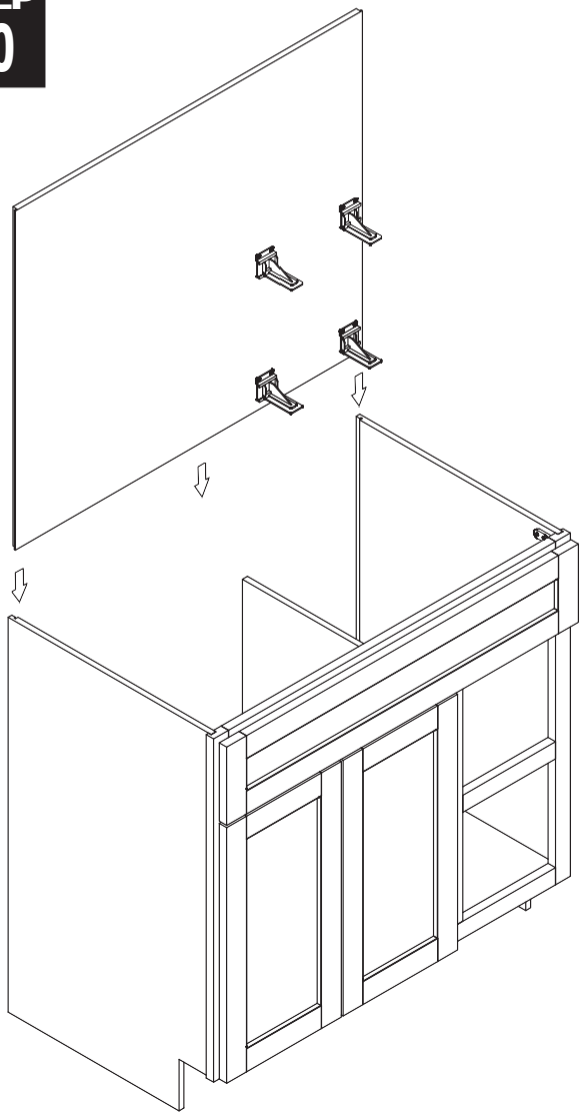

STEP 11

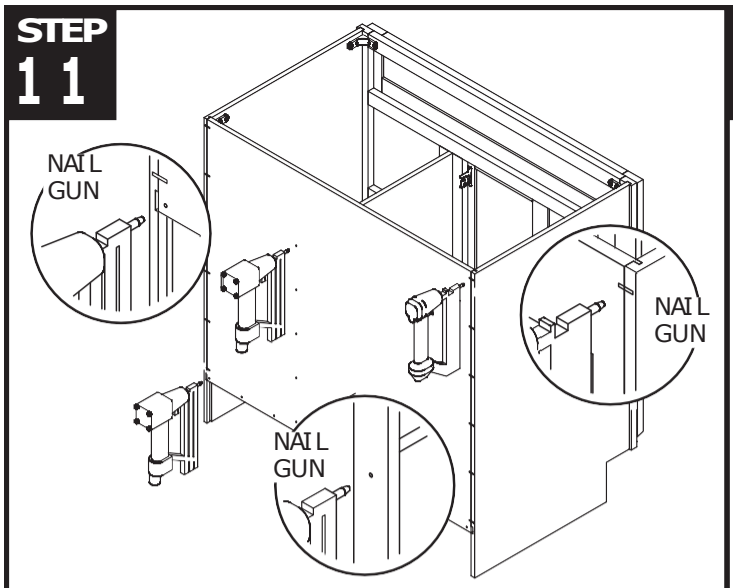

STEP 12

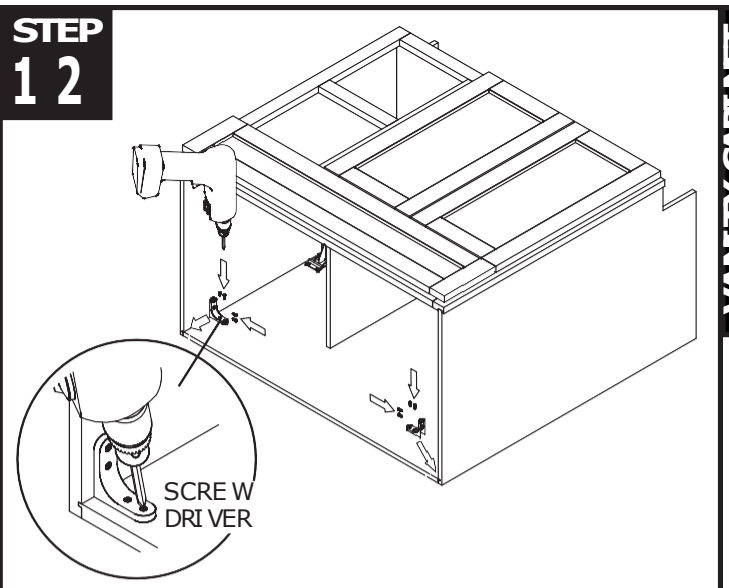

STEP 13

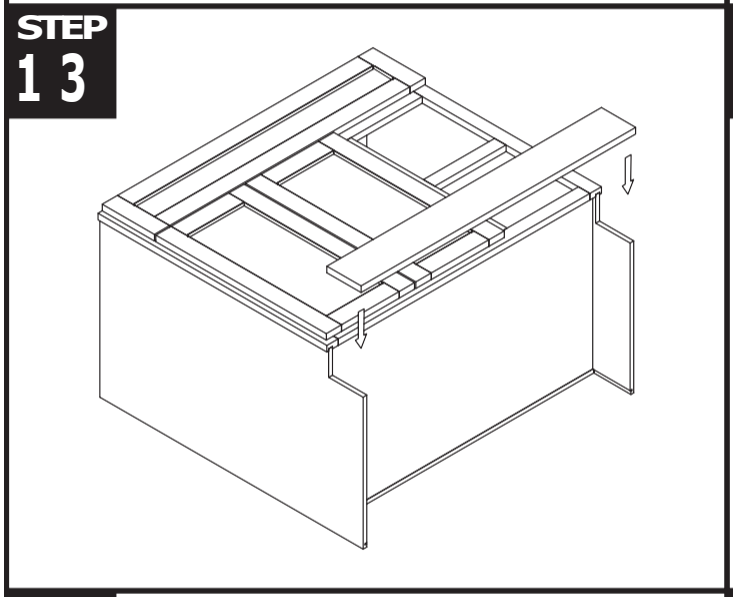

STEP 14

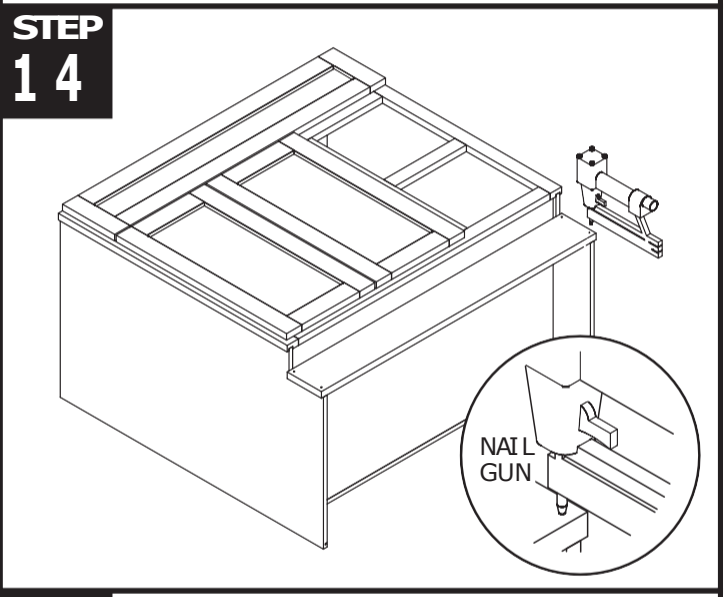

STEP 15

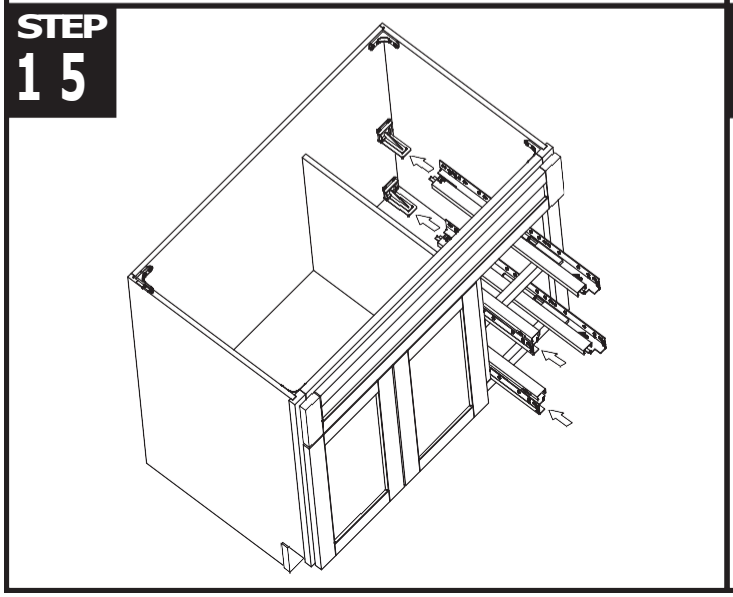

STEP 16

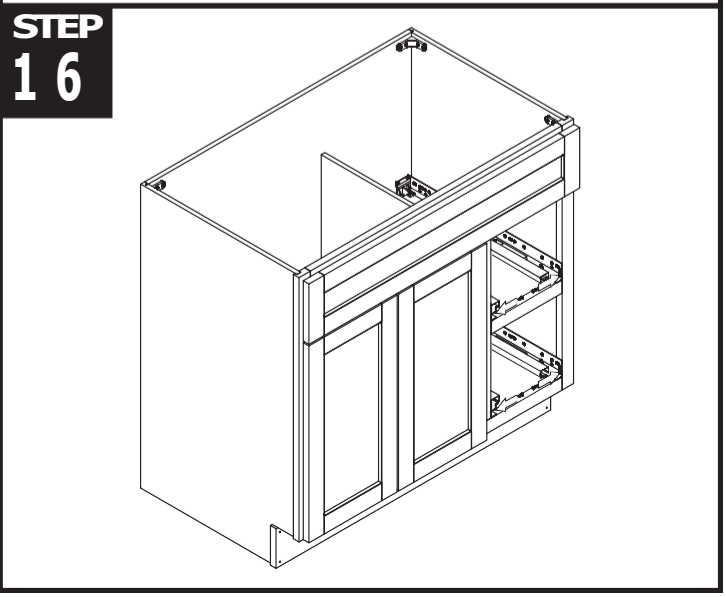

STEP 17

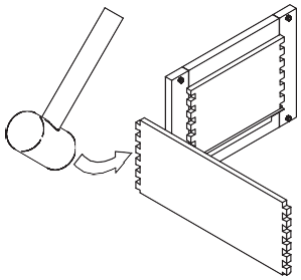

STEP 18

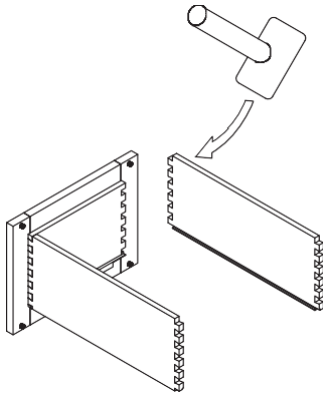

STEP 19

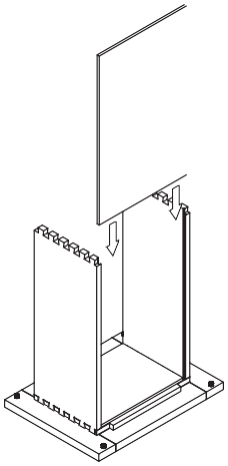

STEP 20

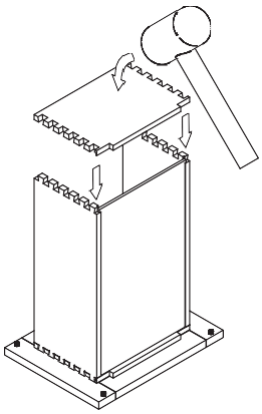

STEP 21

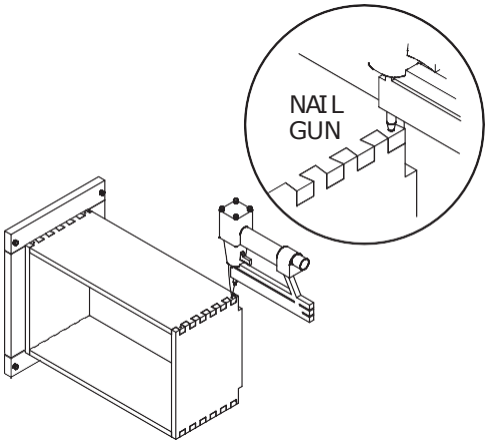

STEP 22

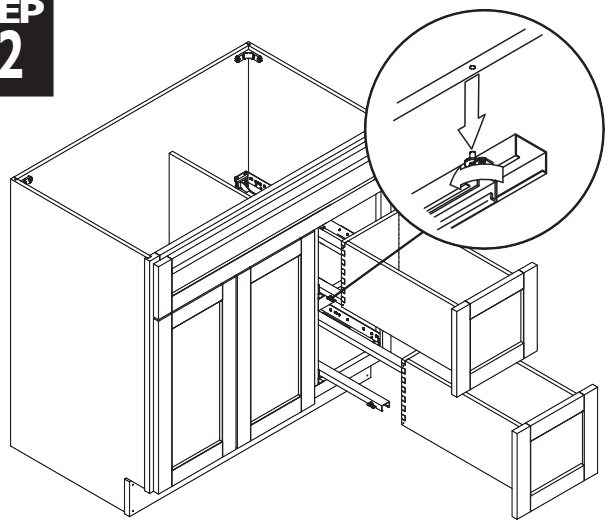

STEP 23

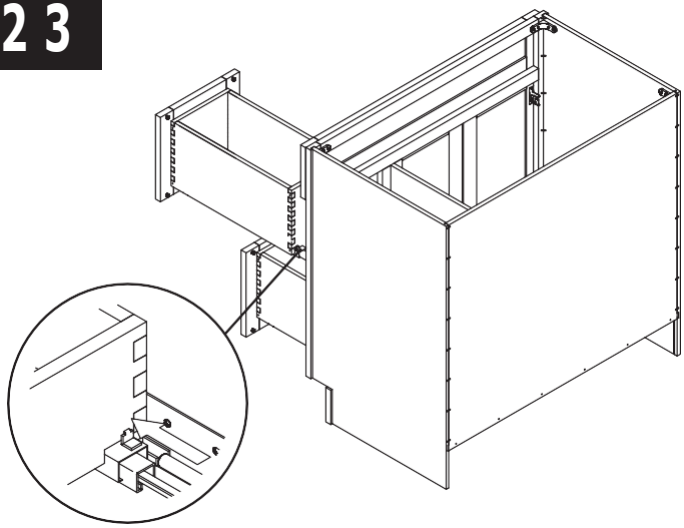

VANITY CABINET
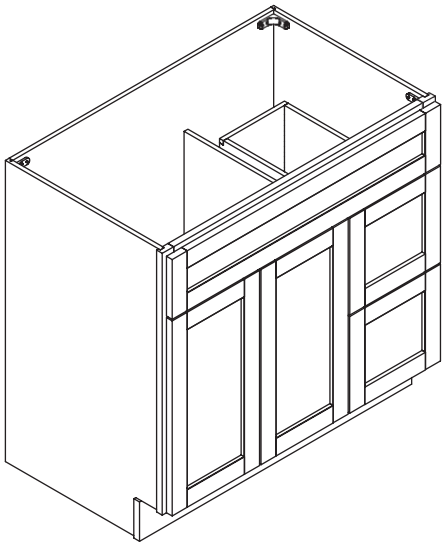
STEP 24